installation, start-up and service instructions

COMMERCIAL AIR-COOLED CONDENSING UNITS

566D/E
569D/F
576C
Sizes 072-240
6 to 20 Tons

Cancels: II 569D-72-1

II 569D-72-2
9/15/04

CONTENTS

Page

SAFETY CONSIDERATIONS 1
INSTALLATION 1-14
- **I. Complete Pre-Installation Checks** 1
- **II. Rig and Mount the Unit** 9
- **III. Complete Refrigerant Piping Connections** 9
- **IV. Install Accessories** 11
- **V. Complete Electrical Connections** 11

PRE-START-UP 15
- **I. System Check** 15
- **II. Leak Test and Dehydration** 15
- **III. Turn On Crankcase Heater** 15
- **IV. Preliminary Charge** 15

START-UP 15-20
- **I. 569D, 566E, 569F Units** 15
- **II. 576C, 566D Units** 19

OPERATING SEQUENCE 20, 21
- **I. Cooling** 20
- **II. Heating** 21

SERVICE 21-24
- **I. Capacity Control (576C, 566D Units)** 21
- **II. Head Pressure Control (566D, 566E150-240 Units Only)** 21
- **III. Time Guard II Circuit (566D Only)** 21
- **IV. Crankcase Heater** 22
- **V. Compressor Protection** 22
- **VI. Low-Pressure Switches** 22
- **VII. High-Pressure Switches** 22
- **VIII. Discharge Gas Thermostat** 22
- **IX. Outdoor Fans** 22
- **X. Lubrication** 22
- **XI. Coil Cleaning and Maintenance** 22

TROUBLESHOOTING 25, 26
START-UP CHECKLIST CL-1, CL-2

SAFETY CONSIDERATIONS

Installing, starting up, and servicing air-conditioning equipment can be hazardous due to system pressures, electrical components, and equipment location (roofs, elevated structures, etc.).

Only trained, qualified installers and service mechanics should install, start-up, and service this equipment.

Untrained personnel can perform basic maintenance functions such as cleaning coils. All other operations should be performed by trained service personnel.

When working on the equipment, observe precautions in the literature and on tags, stickers, and labels attached to the equipment.

Follow all safety codes. Wear safety glasses and work gloves. Keep quenching cloth and fire extinguisher nearby when brazing. Use care in handling, rigging, and setting bulky equipment.

⚠ **WARNING:** Before installing or servicing system, always turn off main power to system and install lockout tag on disconnect. There may be more than one disconnect switch. Electrical shock can cause personal injury.

INSTALLATION

I. COMPLETE PRE-INSTALLATION CHECKS

A. Uncrate Unit

Remove unit packaging except for the top skid assembly, which should be left in place until after the unit is rigged into its final location.

B. Inspect Shipment

File claim with shipping company if shipment is damaged or incomplete.

C. Consider System Requirements

- Consult local building codes and National Electrical Code (NEC) for special installation requirements.
- Allow sufficient space for airflow clearance, wiring, refrigerant piping, and servicing unit. See Fig. 1-4 for unit dimensions and weight distribution data.
- Locate unit so that outdoor coil (condenser) airflow is unrestricted on all sides and above.
- Unit may be mounted on a level pad directly on the base channels or mounted on a raised structural steel frame. See Tables 1A to 1C for unit operating weights. See Fig. 1-4 for weight distribution based on recommended support points.

NOTE: If vibration isolators are required for a particular installation, use the data in Fig. 1-4 to make the proper selection.

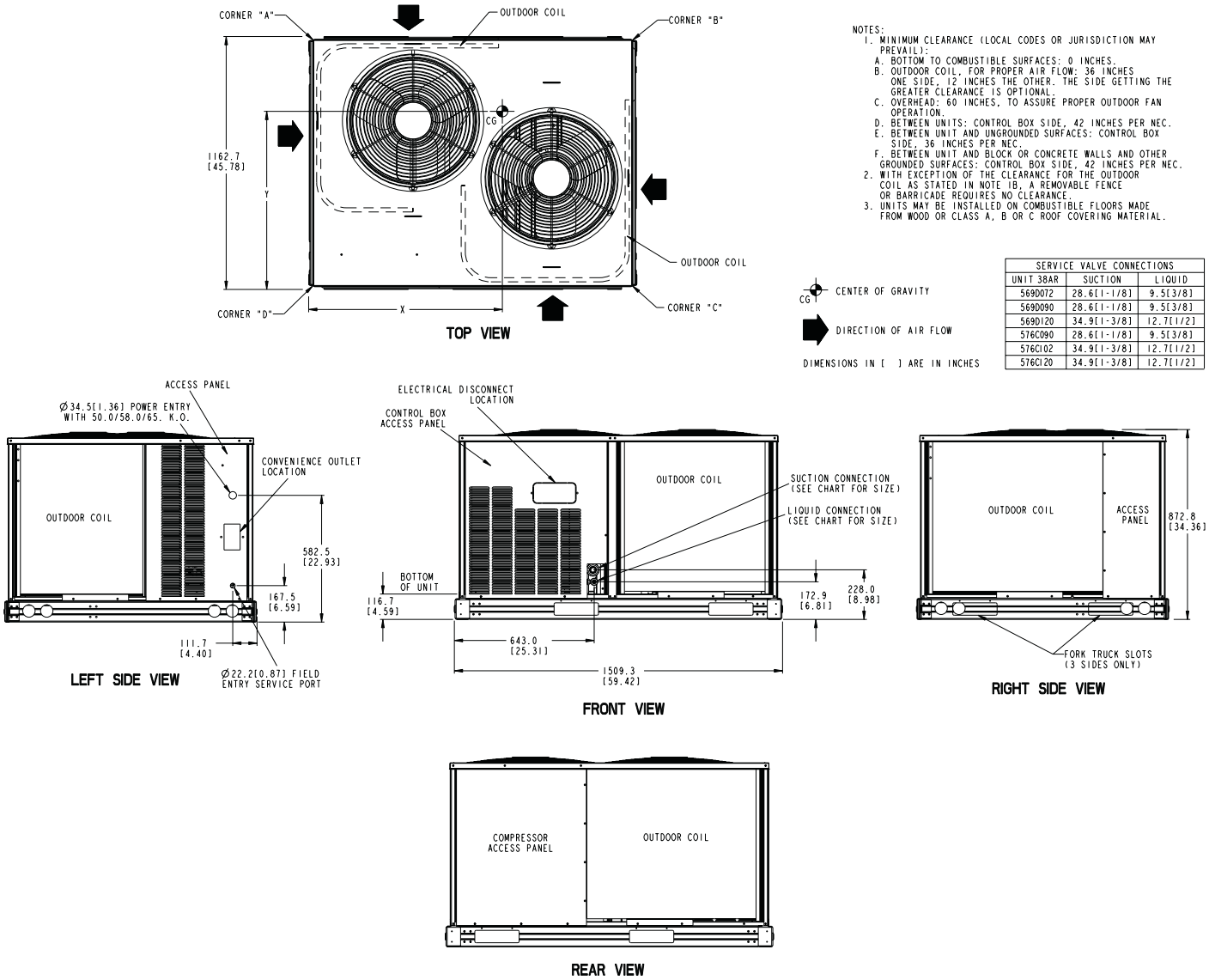

UNIT	ALUMINUM COIL lb (kg)					COPPER COIL lb (kg)				
	Standard Weight	Corner A	Corner B	Corner C	Corner D	Standard Weight	Corner A	Corner B	Corner C	Corner D
569D072	300 (136)	62 (28)	103 (47)	62 (28)	72 (33)	352 (160)	95 (43)	92 (42)	92 (42)	72 (33)
569D090	383 (174)	86 (39)	123 (56)	85 (39)	89 (40)	484 (220)	122 (55)	137 (62)	122 (55)	104 (47)
569D120	430 (195)	84 (38)	166 (75)	66 (30)	114 (52)	531 (241)	121 (55)	176 (81)	103 (47)	128 (58)
576C090	550 (249)	49 (22)	262 (119)	75 (34)	165 (75)	651 (295)	88 (40)	273 (124)	114 (52)	177 (80)
576C102	575 (261)	55 (25)	265 (120)	88 (40)	167 (76)	676 (307)	94 (43)	276 (125)	127 (58)	179 (81)
576C120	575 (261)	55 (25)	265 (120)	88 (40)	167 (76)	676 (307)	94 (43)	276 (125)	127 (58)	179 (81)

UNIT	ALUMINUM COIL		COPPER COIL	
	Center of Gravity mm [in.]		Center of Gravity mm [in.]	
	X	Y	X	Y
569D072	831.9 [32.75]	641.4 [25.25]	789.7 [31.09]	619.3 [24.38]
569D090	822.3 [32.38]	635.0 [25.00]	806.5 [31.75]	621.8 [24.48]
569D120	812.8 [32.00]	676.3 [26.63]	800.1 [31.50]	656.3 [25.84]
576C090	924.1 [36.38]	657.3 [25.88]	896.4 [35.29]	644.1 [25.36]
576C102	927.1 [36.50]	647.7 [25.50]	900.2 [35.44]	636.3 [25.05]
576C120	927.1 [36.50]	647.7 [25.50]	900.2 [35.44]	636.3 [25.05]

Fig. 1 — 569D072-120, 576C090-120 Unit Dimensions

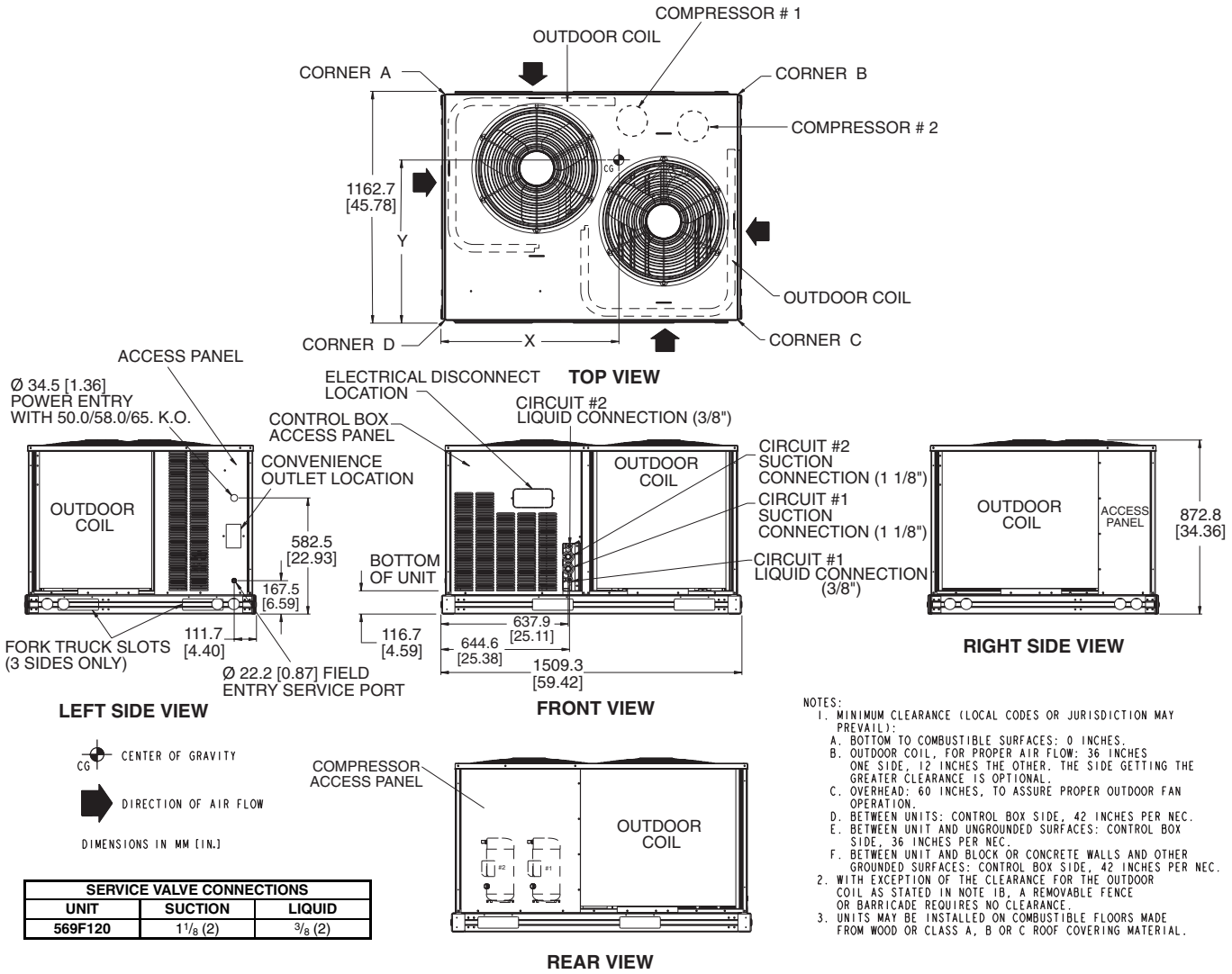

SERVICE VALVE CONNECTIONS		
UNIT	SUCTION	LIQUID
569F120	1 1/8 (2)	3/8 (2)

UNIT	ALUMINUM COIL												COPPER COIL											
	Std. Unit Wt.		Corner A		Corner B		Corner C		Corner D		Center of Gravity mm [in.]		Std. Unit Wt.		Corner A		Corner B		Corner C		Corner D		Center of Gravity mm [in.]	
	lb	kg	lb	kg	lb	kg	lb	kg	lb	kg	X	Y	lb	kg	lb	kg	lb	kg	lb	kg	lb	kg	X	Y
569F120	488	221	102	46	143	65	139	63	104	47	873.8 [34.4]	591.8 [23.3]	589	267	129	59	166	75	164	74	130	59	845.8 [33.3]	579.1 [22.8]

Fig. 2 — 569F120 Unit Dimensions

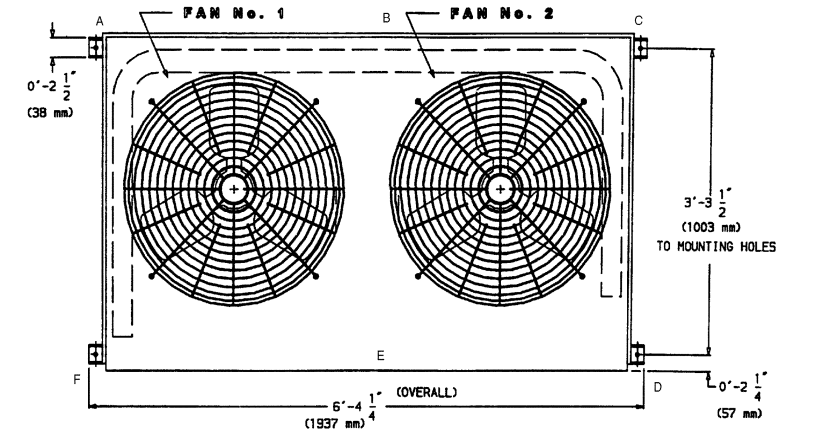

TOP VIEW

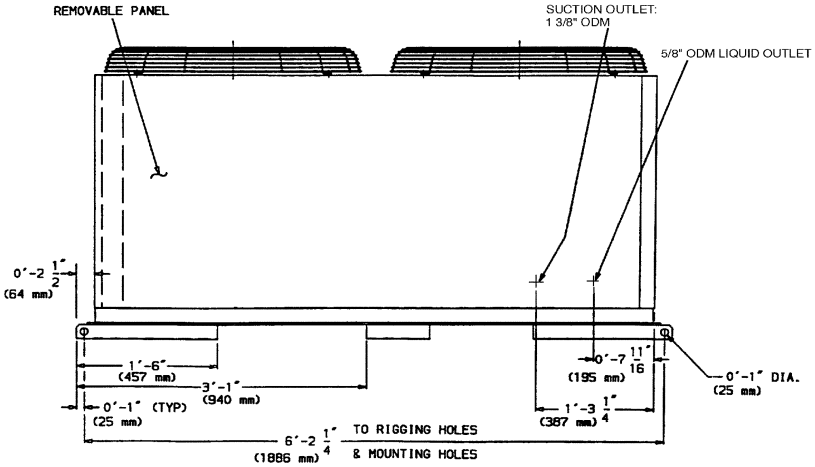

SIDE VIEW

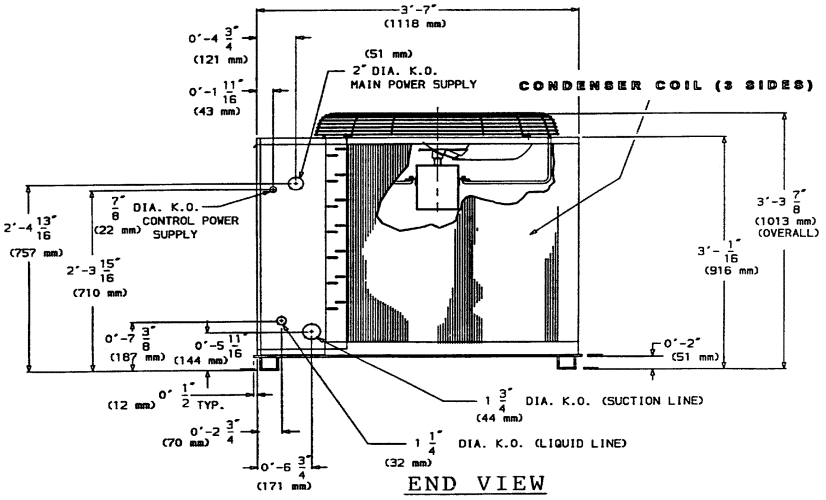

END VIEW

UNIT 566D	ALUMINUM COIL							COPPER COIL						
	Standard Weight lb (kg)	Operational Weight Points lb (kg)						Standard Weight lb (kg)	Operational Weight Points lb (kg)					
		A	B	C	D	E	F		A	B	C	D	E	F
150	779 (354)	70 (32)	177 (80)	68 (31)	100 (45)	261 (119)	103 (47)	919 (418)	99 (45)	224 (102)	96 (44)	114 (52)	268 (122)	118 (54)
180	789 (359)	70 (32)	180 (82)	69 (31)	101 (46)	265 (120)	104 (47)	929 (422)	99 (45)	228 (104)	96 (44)	115 (52)	273 (124)	118 (54)
240	900 (422)	84 (38)	234 (106)	82 (37)	108 (49)	310 (141)	111 (50)	1040 (473)	110 (50)	283 (129)	107 (49)	116 (53)	305 (139)	119 (54)

NOTES:
1. Service clearances are as follows:
   Side (compressor) — 3½ ft (1067 mm)
   Side (opposite compressor) — 3 ft (914 mm)
   Ends — 2 ft (610 mm)
   Top — 5 ft (1524 mm)
2. Corner weights are approximate.
3. Actual support weights depend on level of unit and evenness of support posts.
4. Total weights represent approximate unit weights without shipping package.
5. Bottom or top skid is NOT included in the weights.

Fig. 3 — 566D150-240 Unit Dimensions

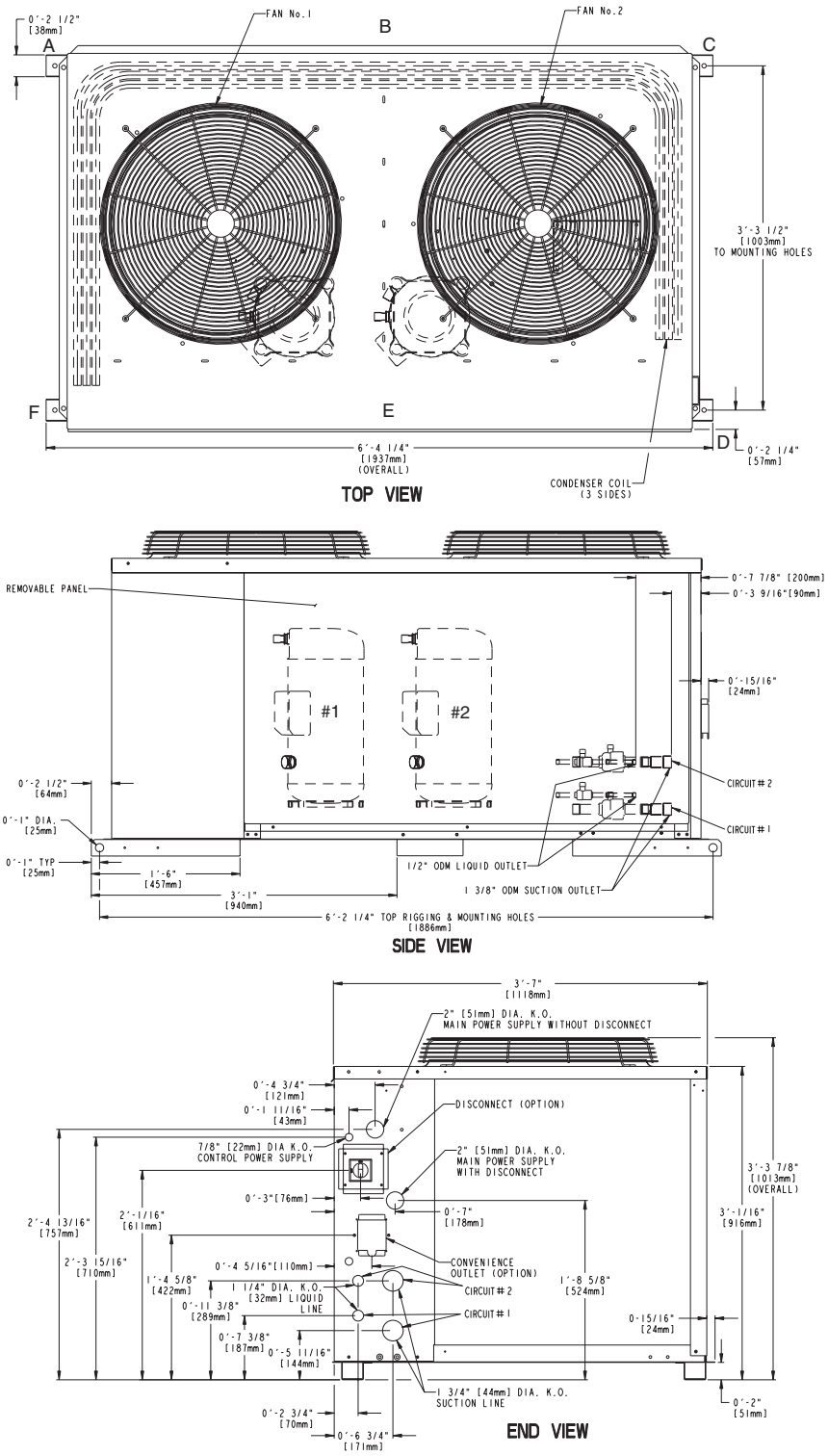

UNIT 566E	ALUMINUM COIL							COPPER COIL						
	Standard Weight lb (kg)	Operational Weight Points lb (kg)						Standard Weight lb (kg)	Operational Weight Points lb (kg)					
		A	B	C	D	E	F		A	B	C	D	E	F
150	676 (307)	84 (38)	168 (76)	72 (33)	78 (35)	183 (83)	91 (41)	822 (373)	118 (54)	219 (100)	103 (47)	90 (41)	190 (86)	102 (46)
180	740 (336)	86 (39)	186 (85)	71 (32)	82 (37)	216 (98)	99 (45)	886 (403)	119 (54)	238 (129)	102 (46)	95 (43)	221 (100)	111 (50)
240	764 (347)	87 (40)	192 (87)	72 (33)	85 (39)	226 (103)	102 (46)	904 (411)	120 (55)	243 (110)	102 (46)	96 (44)	230 (105)	113 (51)

NOTES:

1. Service clearances are as follows:
   Side (compressor) — $3^1/_2$ ft (1067 mm)
   Side (opposite compressor) — 3 ft (914 mm)
   Ends — 2 ft (610 mm)
   Top — 5 ft (1524 mm)
2. Corner weights are approximate.
3. Actual support weights depend on level of unit and evenness of support posts.
4. Total weights represent approximate unit weights without shipping package.
5. Bottom or top skid is NOT included in the weights.

Fig. 4 — 566E150-240 Unit Dimensions

Table 1A — Physical Data — 569D072-120, 576C090-120, 569F120 Units

UNIT SIZE	569D072	569D090	569D120	576C090	576C102	576C120	569F120
NOMINAL CAPACITY (tons)	6	7 1/2	10	7 1/2	8 1/2	10	10
OPERATING WEIGHT (lb)							
Aluminum-Fin Coils (Standard)	300	383	430	550	575	575	488
Copper-Fin Coils (Optional)	352	484	531	651	676	676	589
REFRIGERANT TYPE*	R-22						
Operating Charge, Typical (lb)†	12	20	22	20	24	24	11/Circuit
Shipping Charge (lb)	2.0						
COMPRESSOR	Scroll			Reciprocating			Scroll
Qty...Model	1...SR_68	1...SR_94	1...ZR125	1...06DA818	1...06DA824	1...06DH824	2...SR_60
Oil Charge (oz)	88	90	110	88	128	128	72 (ea)
No. Cylinders	N/A			4	6	6	N/A
Speed (rpm)	3500			1750			3500
CONDENSER FANS							
Qty...Rpm	2...850	2...1100	2...1100	2...1100	2...1100	2...1100	2...1100
Motor Hp	1/8	1/4	1/4		1/4		1/4
Diameter	22	22			22		22
Nominal Airflow (Cfm Total)	5400	6500			6500		6500
Watts (Total)	340	570			570		570
CONDENSER COIL (Qty)	2			2			2
Face Area (sq ft total)	29.2			29.2			29.2
Rows...Fins/in.	1...17	2...17	2...17	2...17			2...17
Storage Capacity (lb)**	17.3	34.2	34.2	34.2			17.1 (ea)
CONTROLS							
Pressurestat Settings (psig)							
High Cutout	428 ± 10			428 ± 10			428 ± 10
Cut-in	320 ± 20			320 ± 20			320 ± 20
Low Cutout	27 ± 3			27 ± 3			27 ± 3
Cut-in	44 ± 5			44 ± 5			44 ± 5
DISCHARGE GAS THERMOSTAT (F)							
Cutout	—	270 ± 9	—	—	—	—	—
Cut-in	—	190 ± 13	—	—	—	—	—
PRESSURE RELIEF							
Location	Suction Line						
Temperature (F)	200						
PIPING CONNECTIONS (in. ODM)							
Qty...Suction	1...1 1/8	1...1 1/8	1...1 3/8	1...1 1/8	1...1 3/8	1...1 3/8	2...1 1/8
Qty...Liquid	1...3/8	1...3/8	1...1/2	1...3/8	1...1/2	1...1/2	2...3/8

*Unit is factory-supplied with holding charge only.
†Typical operating charge with 25 ft of interconnecting piping.
**Storage capacity of condenser coil with coil 80% full of liquid R-22 at 95 F.

NOTE: Unit 576C120 has one step of unloading. Full load is at 100% of capacity, and one step of unloading is 67% capacity. Unit 576C120 has the following unloader settings: load is 70 ± 1 psig and unload is 60 ± 2 psig.

Table 1B — Physical Data — 566D150-240 Units

UNIT SIZE	566D150	566D180	566D240
NOMINAL CAPACITY (tons)	$12^1/_2$	15	20
OPERATING WEIGHTS (lb)			
Aluminum-Fin Coil (Standard)	779	789	900
Copper-Fin Coil (Optional)	919	929	1040
REFRIGERANT TYPE*		R-22	
Operating Charge, Typical (lb)†	23	23	28
Shipping Charge (lb)	3.1	3.1	3.1
COMPRESSOR		Reciprocating, Semi-Hermetic	
Qty...Model	1...06DD328	1...06DD537	1...06E4250
No. Cylinders	6	6	4
Speed (rpm)		1750	
Oil Charge (pt)	10	10	15.5
Capacity Steps			
Accessory	33**, 66, 100	33**, 66, 100	—
Standard	66, 100	66, 100	50, 100
Unloader Setting (psig)			
Load		70 ± 1	
Unload		60 ± 2	
Crankcase Heater Watts		125	
CONDENSER FANS		Axial Flow, Direct Drive	
Qty...Rpm		2...1075	
Diameter (in.)		26	
Nominal Hp		$^1/_2$	
Nominal Airflow (cfm, total)		11,000	
Watts (total)		1460	
CONDENSER COIL		Copper Tubes, Aluminum Fins	
Rows...Fins/in.	3...15	3...15	3...15
Face Area (sq ft)	29.2	29.2	29.2
Storage Capacity (lb)††	40.3	39.8	39.8
CONTROLS			
Pressurestat (psig)			
High Cutout		395 ± 10	
Cut-in		295 ± 20	
Low Cutout		27 ± 4	
Cut-in		67 ± 7	
FAN CYCLING CONTROLS			
Operating Pressure (psig)			
No. 2 Fan, Close		255 ± 10	
Open		160 ± 10	
PRESSURE RELIEF			
Location		Liquid Line	
Temperature (F)		200	
PIPING CONNECTIONS (in. ODM)			
Suction	$1^3/_8$	$1^3/_8$	$1^5/_8$
Liquid		$^5/_8$	
Hot Gas Stub		$^3/_8$	

*Unit is factory-supplied with holding charge only.
†Typical operating charge with 25 ft of interconnecting piping. Operating charge is approximate for maximum system capacity.
**Indicates capacity step (%) with electric unloader accessory.
††Storage capacity is measured at liquid saturated temperatures of 123 F for 566D150 and 130 F for 566D180 and 240.

Table 1C — Physical Data — 566E150-240 Units

UNIT SIZE	566E150	566E180	566E240
NOMINAL CAPACITY (tons)	$12^1/_2$	15	20
OPERATING WEIGHTS (lb)			
Aluminum-Fin Coil (Standard)	676	740	764
Copper-Fin Coil (Optional)	822	886	904
REFRIGERANT TYPE*		R-22	
Operating Charge, Typical (lb)†	11.5/Circuit	11.5/Circuit	14/Circuit
Shipping Charge (lb)		3.1	
COMPRESSOR		Scroll	
Qty...Model	2...ZR72	2...ZR94	2...ZR125
Speed (rpm)	3500	3500	3500
Oil Charge (oz)	60 (ea)	85 (ea)	110 (ea)
Crankcase Heater Watts		70	
CONDENSER FANS			
Qty...Rpm		2...1075	
Diameter (in.)		26	
Nominal Hp		$^1/_2$	
Nominal Airflow (cfm, total)		11,000	
Watts (total)		1460	
CONDENSER COIL			
Rows...Fins/in.		3...15	
Face Area (sq ft total)		29.2	
Storage Capacity (lb)**		48	
CONTROLS			
Pressurestat (psig)			
High Cutout		426 ± 7	
Cut-in		320 ± 20	
Low Cutout		27 ± 4	
Cut-in		67 ± 7	
FAN CYCLING CONTROLS			
Operating Pressure (psig)			
No. 2 Fan, Close		255 ± 10	
Open		160 ± 10	
PRESSURE RELIEF			
Location		Liquid Line	
Temperature (F)		200	
PIPING CONNECTIONS (in. ODM)			
Suction		(2) $1^3/_8$	
Liquid		(2) $^1/_2$	
Hot Gas Stub		$^3/_8$	

*Unit is factory-supplied with holding charge only.
†Typical operating charge with 25 ft of interconnecting piping. Operating charge is approximate for maximum system capacity.
**Storage capacity is measured at liquid saturated temperatures of 123 F for 566E150 and 130 F for 566E180 and 240.

II. RIG AND MOUNT THE UNIT

⚠ **CAUTION:** Be sure unit panels are securely in place prior to rigging.

A. Rigging

These units are designed for overhead rigging. Refer to rigging label for preferred rigging method. Spreader bars are not required if top crating is left on unit. All panels must be in place when rigging. As further protection for coil faces, plywood sheets may be placed against sides of unit, behind cables. Run cables to a central suspension point so that angle from the horizontal is not less than 45 degrees. Raise and set unit down carefully.

If it is necessary to roll the unit into position, mount the unit on longitudinal rails, using a minimum of 3 rollers. Apply force to the rails, not the unit. If the unit is to be skidded into position, place it on a large pad and drag it by the pad. Do not apply any force to the unit.

Raise from above to lift unit from the rails or pad when unit is in final position.

After unit in position, remove all shipping materials and top crating.

B. Compressor Mounting

As shipped, the compressor is held tightly in place by self-locking bolts. **Before starting unit, loosen self-locking bolts until the snubber washer can be moved sideways with finger pressure. Do not remove shipping bolts. See Fig. 5.**

III. COMPLETE REFRIGERANT PIPING CONNECTIONS

IMPORTANT: DO NOT bury refrigerant piping underground.

IMPORTANT: A refrigerant receiver is not provided with the unit. Do not install a receiver.

A. Size Refrigerant Lines

Consider the length of piping required between outdoor unit and indoor unit (evaporator), the amount of liquid lift, and compressor oil return. See Tables 2A-4. Refer to indoor unit installation instructions for additional information.

IMPORTANT: Use the piping data in Tables 2A-4 as a general guide only. For 569D, 576C, 569F applications with liquid lift greater than 20 ft, use 5/8-in. liquid line. Maximum lift is 60 ft.

Condensing units with multiple-step unloading *may require double suction risers* to assure proper oil return at minimum load operating condition. See Tables 3A-4 and Fig. 6. Reduction of evaporator coil surface should be analyzed to provide sufficient refrigerant velocity to return oil to the compressor. Liquid line solenoid valves may be used in certain situations to accomplish this. Hot gas bypass, if used, should be introduced before the evaporator.

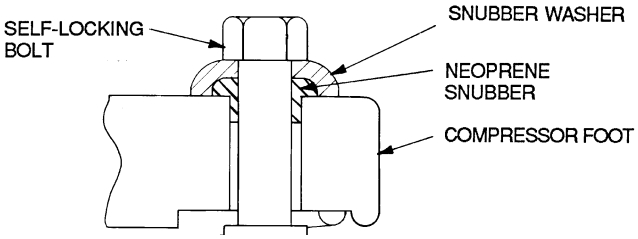

Fig. 5 — Compressor Mounting

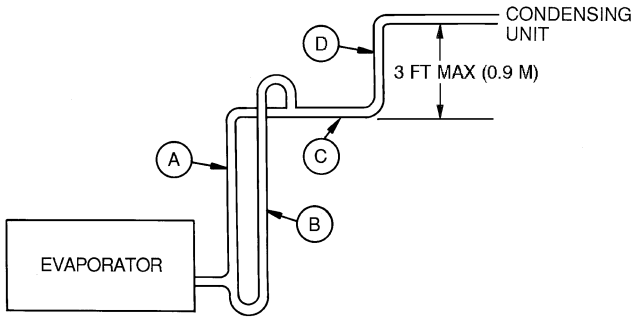

LEGEND

(A) — Suction Riser *Without* Trap
(B) — Suction Riser *With* Trap
(C) — Suction Line to Condensing Unit
(D) — Short Vertical Riser into Condensing Unit:

566D150,180 — 1 3/8 in. OD
566D240 — 1 5/8 in. OD

Fig. 6 — Suction Line Piping

Note that refrigerant suction piping should be insulated.

Table 2A — Liquid Line Data — 566D150-240 Units

UNIT 566D	MAXIMUM ALLOWABLE LIQUID LIFT ft (m)	LIQUID LINE		
		Maximum Allowable Pressure Drop psig (kPa)	Maximum Allowable Temp. Loss F (C)	Filter Drier and Sight Glass Flare Conn.* in.
150	67 (20.4)	7 (48.3)	2 (1.1)	5/8
180	82 (25.0)			
240	87 (26.5)			

Table 2B — Liquid Line Data — 566E150-240 Units

UNIT 566E	MAXIMUM ALLOWABLE LIQUID LIFT ft (m)	LIQUID LINE	
		Maximum Allowable Pressure Drop psig (kPa)	Maximum Allowable Temp. Loss F (C)
150	60 (18)	7 (48)	2 (1)
180			
240			

*Inlet and outlet.

NOTE: Data shown is for units operating at 45 F (7.2 C) saturated suction and 95 F (35 C) entering air.

Table 3A — Refrigerant Piping Sizes — 569D, 576C, 569F Units

UNIT		LINEAR LENGTH OF INTERCONNECTING PIPING — FT (m)							
		0-25 (0-7.5)		26-50 (7.8-15)		51-75 (15.3-23)		76-100* (23.3-30)	
		Line Size (in. OD)							
		L	S	L	S	L	S	L	S
569D	072	3/8	1 1/8	3/8	1 1/8	3/8	1 1/8	3/8	1 1/8
	090	3/8	1 1/8	3/8	1 1/8	3/8	1 1/8	3/8	1 1/8
	120	1/2	1 3/8	1/2	1 3/8	1/2	1 3/8	1/2	1 3/8
576C	120	1/2	1 3/8	1/2	1 3/8	1/2	1 3/8	1/2	1 3/8
569F	120	(2) 3/8	(2) 1 1/8	(2) 3/8	(2) 1 1/8	(2) 3/8	(2) 1 1/8	(2) 3/8	(2) 1 1/8

LEGEND
L — Liquid Line **S** — Suction Line

*Field-supplied suction accumulator required.

NOTES:
1. Pipe sizes are based on a 2 F (1 C) loss for liquid and suction lines.
2. Pipe sizes are based on the maximum linear length, shown for each column, plus a 50% allowance for fittings.
3. Charge units with R-22 in accordance with unit installation instructions.

Table 3B — Refrigerant Piping Sizes — 566D Units

UNIT		LENGTH OF INTERCONNECTING PIPING, FT (M)									
		0-15 (0-4.5)		16-25 (4.8-7.5)		26-50 (7.8-15)		51-75 (15.3-23)		76-100* (23.3-30)	
		Line Size (in. OD)									
		L	S	L	S	L	S	L	S	L	S
566D	150	1/2	1 1/8	1/2	1 3/8	5/8	1 3/8	5/8	1 5/8†	5/8	1 5/8†
	180	1/2	1 3/8	5/8	1 3/8	5/8	1 5/8	7/8	1 5/8	7/8	2 1/8†
	240	5/8	1 5/8	5/8	1 5/8	7/8	1 5/8	7/8	2 1/8	7/8	2 1/8

LEGEND
L — Liquid
S — Suction

Close-coupled

*Field-supplied suction accumulator required.
†Requires a double suction riser if 2 unloaders are used and the evaporator is below the condensing unit. See Table 4 and Fig. 6 for more information.

NOTES:
1. Pipe sizes are based on a 2 F (1.1 C) loss for liquid lines and a 1.5 F (0.8 C) loss for suction lines.
2. Pipe sizes are based on an equivalent length equal to the maximum length of interconnecting piping plus 50% for fittings. A more accurate estimate may result in smaller sizes.
3. For applications with refrigerant line lengths greater than 100 ft, contact Bryant representative.

Table 3C — Refrigerant Piping Sizes — 566E Units

UNIT		LINEAR LENGTH OF INTERCONNECTING PIPING FT (M)							
		0-25 (0-7.5)		26-50 (7.8-15)		51-75 (15.3-23)		76-100* (23.3-30)	
		Line Size (in. OD)							
		L	S	L	S	L	S	L	S
566E	150	1/2	1 1/8	1/2	1 1/8	1/2	1 1/8	1/2	1 3/8
	180	1/2	1 3/8	1/2	1 3/8	1/2	1 3/8	5/8	1 3/8
	240	1/2	1 3/8	1/2	1 3/8	5/8	1 3/8	5/8	1 3/8

LEGEND
L — Liquid
S — Suction

*Field-supplied suction accumulator required.

NOTES:
1. Pipe sizes are based on a 2 F (1.1 C) loss for liquid lines and a 1.5 F (0.8 C) loss for suction lines.
2. Pipe sizes are based on an equivalent length equal to the maximum length of interconnecting piping plus 50% for fittings. A more accurate estimate may result in smaller sizes.
3. For applications with refrigerant line lengths greater than 100 ft, contact Bryant representative.

Table 4 — Refrigerant Piping Sizes, Double Suction Risers — 566D150, 180 Units

UNIT		LENGTH OF INTERCONNECTING PIPING, FT (M)					
		50-75 (15-23)			76-100 (23.3-30)		
		Line Size (in. OD)					
		A	B	C	A	B	C
566D	150	1 1/8	1 3/8	1 5/8	1 1/8	1 3/8	1 5/8
	180	—	—	—	1 3/8	1 5/8	2 1/8

NOTES:
1. See Fig. 5 for "A," "B," and "C" dimensions.
2. No double suction risers are needed for unit size 240.

B. Install Filter Drier(s) and Moisture Indicator(s)

Every unit should have a filter drier and liquid-moisture indicator (sight glass). Refer to Table 5. In some applications, depending on space and convenience requirements, it may be desirable to install 2 filter driers and sight glasses. One filter drier and sight glass may be installed at A locations in Fig. 7, or, 2 filter driers and sight glasses may be installed at B locations.

Select the filter drier for maximum unit capacity and minimum pressure drop. Complete the refrigerant piping from indoor unit to outdoor unit before opening the liquid and suction lines at the outdoor unit.

C. Install Liquid Line Solenoid Valve — Solenoid Drop

It is recommended that a solenoid valve be placed in the main liquid line (see Fig. 7) between condensing unit and fan coil. Refer to Table 5. (A liquid line solenoid valve is required when the liquid line length exceeds 75 ft.) This valve prevents refrigerant migration (which causes oil dilution) to the compressor during the off cycle at low outdoor ambient temperatures. The solenoid should be wired in parallel with the compressor contactor coil. This means of electrical control is referred to as solenoid *drop* control.

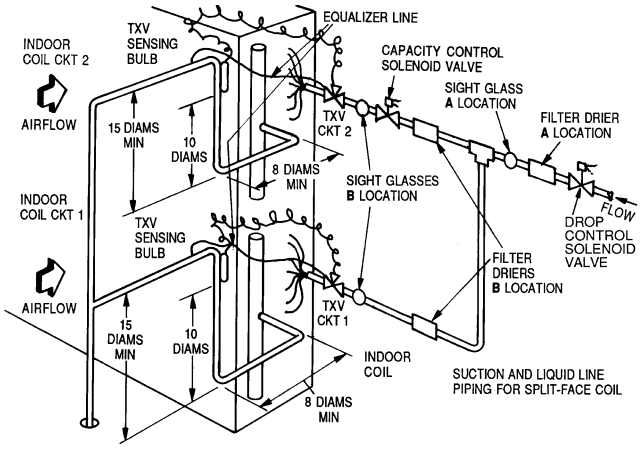

LEGEND
TXV — Thermostatic Expansion Valve

Fig. 7 — Location of Sight Glass(es) and Filter Driers

Table 5 — Refrigerant Specialities Part Numbers

UNIT	LIQUID LINE SIZE (in.)	LIQUID LINE SOLENOID VALVE (LLSV)	LLSV COIL	SIGHT GLASS	FILTER DRIER	SUCTION LINE ACCUMULATOR
569D072	3/8	200RB5T3M	AMG/24V	AMI-1TT3	P502-8304S*	S-7063S*
569D090	3/8	200RB5T3M	AMG/24V	AMI-1TT3	P502-8304S*	S-7063S*
	1/2	200RB5T4M	AMG/24V	AMI-1TT4	P502-8304S	S-7063S*
569D120	1/2	200RB6T4M	AMG/24V	AMI-1TT4	P502-8307S*	S-7063
576C120	1/2	200RB6T4M	AMG/24V	AMI-1TT4	P502-8307S*	S-7063
566D150	1/2	200RB7T4M	AMG/24V	AMI-1TT4	P502-8757S*	S-7063
	5/8	200RA8T5M	AMG/24V	AMI-1TT5	P502-8757S*	S-7063
566D180	1/2	200RB7T4M	AMG/24V	AMI-1TT4	P502-8757S*	S-7721
	5/8	240RA8T5M	AMG/24V	AMI-1TT5	P502-8757S*	S-7721
	7/8	200RA8T7M	AMG/24V	AMI-1TT7	P502-8757S	S-7721
566D240	5/8	200RA9T5M	AMG/24V	AMI-1TT5	P502-8757S*	S-7721
	7/8	200RA9T7M	AMG/24V	AMI-1TT7	P502-8757S	S-7721
569F120	3/8	200RB5T3M Qty 2	AMG/24V Qty 2	AMI-1TT3 Qty 2	P502-8304S* Qty 2	S-7061 Qty 2
566E150	1/2	200RB5T4M Qty 2	AMG/24V Qty 2	AMI-1TT4 Qty 2	P502-8304S Qty 2	S-7063S* Qty 2
566E180	1/2	200RB5T4M Qty 2	AMG/24V Qty 2	AMI-1TT4 Qty 2	P502-8304S Qty 2	S-7063S Qty 2
	5/8	200RB5T5M Qty 2	AMG/24V Qty 2	AMI-1TT5 Qty 2	P502-8305S Qty 2	S-7063S Qty 2
566E240	1/2	200RB6T4M Qty 2	AMG/24V Qty 2	AMI-1TT5 Qty 2	P502-8307S*	S-7063S Qty 2
	5/8	200RB6T5M Qty 2	AMG/24V Qty 2	AMI-1TT5 Qty 2	P502-8307S*	S-7063S Qty 2

*Bushings required.

D. Install Liquid Line Solenoid Valve (Optional) — Capacity Control

If 2-step cooling is desired, place a solenoid valve in the location shown in Fig. 7.

E. Make Piping Connections

Do not remove runaround loop from suction and liquid line stubs in the compressor compartment until piping connections are ready to be made. Pass nitrogen or other inert gas through piping while brazing to prevent formation of copper oxide.

⚠ **WARNING:** Recover holding charge prior to removal of runaround piping loop.

1. Open service valves:
   a. Discharge service valve on compressor.
   b. Suction service valve on compressor.
   c. Liquid line valve.
2. Remove 1/4-in. flare cap from liquid valve Schrader port.
3. Attach refrigerant recovery device and recover holding charge.
4. Remove runaround loop.
5. Install a field-supplied liquid moisture indicator in the piping immediately leaving outdoor unit.
6. If necessary, install field-supplied thermostatic expansion valve(s) (TXVs) in air handler.

If 2 TXVs are installed and two-step cooling is desired, install field-supplied capacity control liquid line solenoid valve ahead of the upper TXV (see Fig. 7).

F. Provide Safety Relief

A fusible plug is located on the compressor crankcase or in the liquid line (Fig. 8). Do not cap this plug. If local code requires additional safety devices, install them as directed.

IV. INSTALL ACCESSORIES

Field install accessories such as low-ambient control before proceeding with wiring. Refer to the instructions shipped with the accessory.

V. COMPLETE ELECTRICAL CONNECTIONS

A. Power Wiring

Unit is factory wired for voltage shown on nameplate. Provide adequate fused disconnect switch within sight from unit and readily accessible from unit, but out of the reach of children. Lock switch open (off) to prevent power from being turned on while unit is being serviced. Disconnect switch, fuses, and field wiring must comply with national and local code requirements. See Tables 6A-6C.

Route power wires through opening in unit end panel to connection in unit control box as shown on unit label diagram and in Fig. 9. Unit must be grounded.

Affix crankcase heater warning sticker to unit disconnect switch.

B. Control Circuit Wiring

Control voltage is 24 v. See Fig. 10 and unit label diagram for field-supplied wiring details. Route control wires through opening in unit end panel to connection in unit control box.

C. Control Transformer Wiring (569D, 576C, 569F Units Only)

On multivoltage units, check the transformer primary wiring connections. See Fig. 11 or refer to unit label diagram.

If unit will be operating at 208-3-60 power, remove black wire (BLK) from the transformer primary connection labelled “230” and move it to the connection labelled “208”. See Fig. 11.

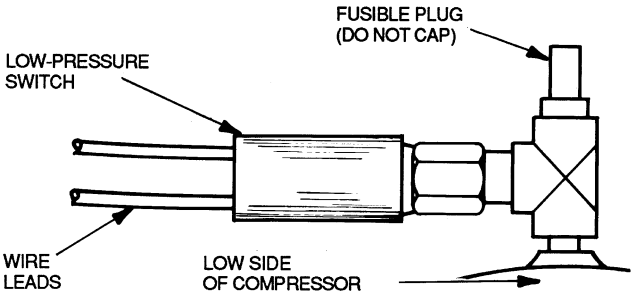

NOTES:
1. 566D240 has a fusible plug in the liquid line.
2. 569D120, 576C120 and 569F120 units have a fusible joint in the liquid line.

Fig. 8 — Location of Fusible Plug (566D)

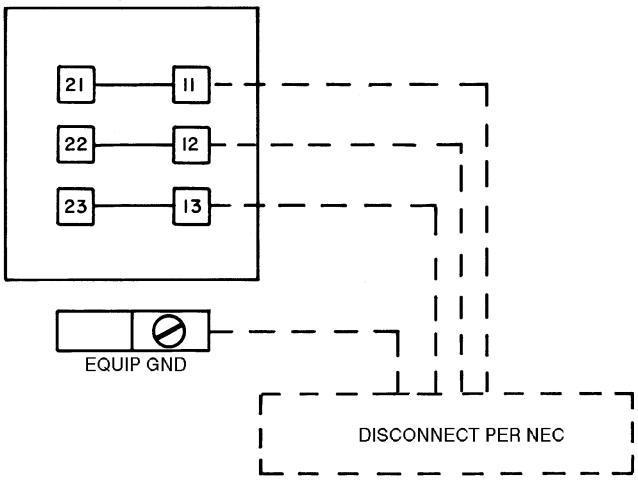

LEGEND

EQUIP GND — Equipment Ground
NEC — National Electrical Code
——— Factory Wiring
- - - Field Wiring

NOTE: Terminal block (TB1) is used for 566E150-240 and 566D150-240 units. Pigtails are provided on 569D, 576C, 569F units.

Fig. 9 — Main Power Supply Wiring (566D Unit Shown)

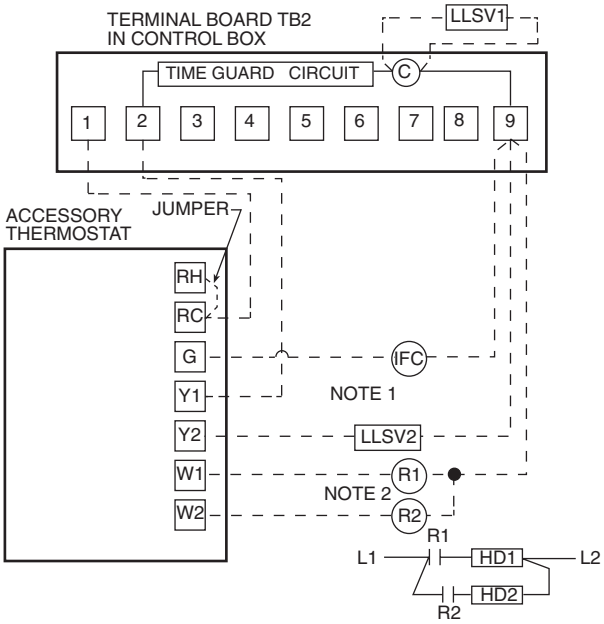

LEGEND

C — Compressor Contactor
HD — Heating Device
IFC — Indoor-Fan Contactor
LLSV1 — Liquid Line Solenoid Valve 1 — Refrigerant Migration Control
LLSV2 — Liquid Line Solenoid Valve 2 — Capacity Control
R — Relay
——— Factory Wiring
- - - Field Wiring

NOTES:
1. Combination LLSV plus IFC va should not exceed 30 va.
2. Do not exceed 5 va (24 vac) per coil.
3. If va values shown in Notes 1 and 2 must be exceeded, use accessory relay transformer package 38AE900001 (60 Hz).

Fig. 10 — Typical Remote Thermostat Wiring (566D Unit Shown)

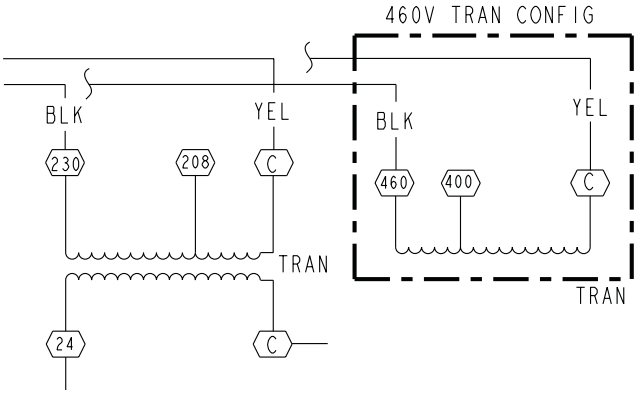

Fig. 11 — Control Transformer Wiring (569D, 576C, 569F Unit Shown)

Table 6A — Electrical Data — 569D072-120, 576C090-120, 569F120 Units

UNIT SIZE		FACTORY INSTALLED OPTION	NOMINAL VOLTAGE	VOLTAGE RANGE*		COMPRESSOR		FAN MOTORS (Qty 2)		POWER SUPPLY	
			V-Ph-Hz	Min	Max	RLA	LRA	FLA (ea)	LRA (ea)	MCA	MOCP
569D	072	NONE OR DISCONNECT CONVENIENCE OUTLET	208/230-3-60	187	254	19.2	146	0.9	1.6	25.8 30.6	35 35
		NONE OR DISCONNECT CONVENIENCE OUTLET	460-3-60	418	506	9.6	73	0.4	0.9	12.8 15.0	20 20
		NONE OR DISCONNECT CONVENIENCE OUTLET	575-3-60	523	632	7.7	58.4	0.4	0.9	10.2 12.0	15 15
	090	NONE OR DISCONNECT CONVENIENCE OUTLET	208/230-3-60	187	254	25.6	190	1.5	3.1	35.0 39.8	60 60
		NONE OR DISCONNECT CONVENIENCE OUTLET	460-3-60	418	506	12.8	95	0.7	1.9	17.4 19.6	30 30
		NONE OR DISCONNECT CONVENIENCE OUTLET	575-3-60	523	632	10.2	76	0.7	1.9	13.8 15.5	20 20
	120	NONE OR DISCONNECT CONVENIENCE OUTLET	208/230-3-60	187	254	37.8	239	1.5	3.1	50.3 55.1	60 70
		NONE OR DISCONNECT CONVENIENCE OUTLET	460-3-60	418	506	17.2	125	0.7	1.9	22.9 25.1	30 30
		NONE OR DISCONNECT CONVENIENCE OUTLET	575-3-60	523	632	13.4	80	0.7	1.9	17.8 19.5	25 25
576C	090	NONE OR DISCONNECT CONVENIENCE OUTLET	208/230-3-60	187	254	28.2	160	1.5	3.1	38.3 43.1	60 60
		NONE OR DISCONNECT CONVENIENCE OUTLET	460-3-60	418	506	14.1	80	0.7	1.9	19.0 21.2	25 25
		NONE OR DISCONNECT CONVENIENCE OUTLET	575-3-60	523	632	11.3	64	0.7	1.9	15.2 16.9	20 20
	102	NONE OR DISCONNECT CONVENIENCE OUTLET	208/230-3-60	187	254	36	198	1.5	3.1	48.0 52.8	60 70
		NONE OR DISCONNECT CONVENIENCE OUTLET	460-3-60	418	506	18	99	0.7	1.9	23.9 26.1	35 35
		NONE OR DISCONNECT CONVENIENCE OUTLET	575-3-60	523	632	14	79	0.7	1.9	18.6 20.3	30 30
	120	NONE OR DISCONNECT CONVENIENCE OUTLET	208/230-3-60	187	254	36	198	1.5	3.1	48.0 52.8	60 70
		NONE OR DISCONNECT CONVENIENCE OUTLET	460-3-60	418	506	18	99	0.7	1.9	23.9 26.1	35 35
		NONE OR DISCONNECT CONVENIENCE OUTLET	575-3-60	523	632	14	79	0.7	1.9	18.6 20.3	30 30
569F	120	NONE OR DISCONNECT CONVENIENCE OUTLET	208/230-3-60	187	254	16	125	1.5	3.1	39.0 43.8	55 55
		NONE OR DISCONNECT CONVENIENCE OUTLET	460-3-60	418	506	8	66.5	0.7	1.9	19.4 21.6	25 25
		NONE OR DISCONNECT CONVENIENCE OUTLET	575-3-60	523	632	6.4	50	0.7	1.9	15.8 17.5	20 20

LEGEND

FLA — Full Load Amps
LRA — Locked Rotor Amps
MCA — Minimum Circuit Amps
MOCP — Maximum Overcurrent Protection
NEC — National Electrical Code
RLA — Rated Load Amps

*Units are suitable for use on electrical systems where voltage supplied to the unit terminals is not below or above the listed limits.

NOTES:

1. The MCA and MOCP values are calculated in accordance with the NEC, Article 440.
2. Motor RLA and LRA values are established in accordance with Underwriters' Laboratories (UL), Standard 1995.
3. The 575-v units are UL, Canada-listed only.
4. Convenience outlet is available as either a factory-installed option or a field-installed accessory and is 115-v, 1 ph, 60 Hz.

Table 6B — Electrical Data — 566D150-240 Units

UNIT		NOMINAL VOLTAGE (3-Ph, 60 Hz)	VOLTAGE RANGE*		COMPRESSOR		FAN MOTORS (Qty 2)			POWER SUPPLY		
					RLA	LRA	FLA (ea) Fan No.		kW	MCA	MOCP†	ICF
			Min	Max			1	2				
566D	150	208/230	187	253	49.3	191	4.3	3.7	1.41	69.6	100	199
		460	414	528	22.1	80	2.3	1.9		31.7	50	84
		575	518	660	17.9	69	1.8	1.8		25.6	40	73
	180	208/230	187	253	63.6	266	4.3	3.7	1.41	87.5	125	274
		460	414	528	29.3	120	2.3	1.9		40.7	60	124
		575	518	660	23.8	96	1.8	1.8		33.0	50	100
	240	208/230	187	254	67.9	345	4.3	3.7	1.41	93.4	150	353
		460	414	508	34.7	173	2.3	1.9		48.1	80	177
		575	518	632	28.8	120	1.8	1.8		40.1	60	124

LEGEND

FLA — Full Load Amps
HACR — Heating, Air Conditioning and Refrigeration
ICF — Maximum Instantaneous Current Flow During Start-Up (LRA of compressor plus total FLA of fan motors)
kW — Total Fan Motor Input (kilowatts)
LRA — Locked Rotor Amps
MCA — Minimum Circuit Amps per NEC, Section 430-24
MOCP — Maximum Overcurrent Protection (amps)
RLA — Rated Load Amps (compressor)

*Units are suitable for use on electrical systems where voltage supplied to the unit terminals is not below or above the listed limits.
†Fuse or HACR circuit breaker.

NOTES:
1. The MCA and MOCP values are calculated in accordance with the National Electrical Code (NEC), Article 440.
2. Motor RLA and LRA values are established in accordance with Underwriters' Laboratories (UL), Standard 1995.
3. The 575-v units are UL, Canada-listed only.

Table 6C — Electrical Data — 566E150-240 Units

UNIT		FACTORY-INSTALLED OPTION	NOMINAL VOLTAGE (3 Ph, 60 Hz)	VOLTAGE RANGE*		COMPRESSOR 1		COMPRESSOR 2		FAN MOTORS (Qty 2)			POWER SUPPLY		
										FLA (ea) Fan No.		kW			
				Min	Max	RLA	LRA	RLA	LRA	1	2		MCA	MOCP†	ICF
566E	150	NONE OR DISCONNECT CONVENIENCE OUTLET	208/230	187	253	20.7	156	20.7	156	4.3	3.7	1.41	55.6	70	186
													63.5	80	194
		NONE OR DISCONNECT CONVENIENCE OUTLET	460	414	528	10.0	75	10.0	75	2.3	1.9	1.41	27.7	35	90
													31.3	40	94
		NONE OR DISCONNECT CONVENIENCE OUTLET	575	518	660	8.2	54	8.2	54	1.8	1.8	1.41	23.1	30	67
													25.9	30	70
	180	NONE OR DISCONNECT CONVENIENCE OUTLET	208/230	187	253	32.1	195	32.1	195	4.3	3.7	1.41	81.2	100	236
													89.2	100	244
		NONE OR DISCONNECT CONVENIENCE OUTLET	460	414	528	16.4	95	16.4	95	2.3	1.9	1.41	42.1	50	117
													45.7	60	120
		NONE OR DISCONNECT CONVENIENCE OUTLET	575	518	660	12.0	80	12.0	80	1.8	1.8	1.41	31.6	40	97
													34.5	40	99
	240	NONE OR DISCONNECT CONVENIENCE OUTLET	208/230	187	253	37.8	239	37.8	239	4.3	3.7	1.41	94.1	125	286
													102.0	150	294
		NONE OR DISCONNECT CONVENIENCE OUTLET	460	414	528	19.2	125	19.2	125	2.3	1.9	1.41	48.4	60	149
													52.0	70	153
		NONE OR DISCONNECT CONVENIENCE OUTLET	575	518	660	13.8	80	13.8	80	1.8	1.8	1.41	35.7	45	98
													38.5	50	101

LEGEND

FLA — Full Load Amps
HACR — Heating, Air Conditioning and Refrigeration
ICF — Maximum Instantaneous Current Flow During Start-Up (LRA of compressor plus total FLA of fan motors)
kW — Total Fan Motor Input (kilowatts)
LRA — Locked Rotor Amps
MCA — Minimum Circuit Amps per NEC, Section 430-24
MOCP — Maximum Overcurrent Protection (amps)
RLA — Rated Load Amps (compressor)

*Units are suitable for use on electrical systems where voltage supplied to the unit terminals is not below or above the listed limits.
†Fuse or HACR circuit breaker.

NOTES:
1. The MCA and MOCP values are calculated in accordance with the National Electrical Code (NEC), Article 440.
2. Motor RLA and LRA values are established in accordance with Underwriters' Laboratories (UL), Standard 1995.
3. The 575-v units are UL, Canada-listed only.

PRE-START-UP

IMPORTANT: Before beginning Pre-Start-Up or Start-Up, review Start-Up Checklist at the back of this book. The Checklist assures proper start-up of a unit and provides a record of unit condition, application requirements, system information, and operation at initial start-up.

⚠ **CAUTION:** Do not attempt to start the condensing unit, even momentarily, until the following steps have been completed. Compressor damage may result.

I. SYSTEM CHECK

1. Check all air handler(s) and other equipment auxiliary components. Consult the manufacturer's instructions regarding any other equipment connected to the condensing unit. If unit has field-installed accessories, be sure all are properly installed and correctly wired. If used, airflow switch must be properly installed.
2. Backseat (open) compressor suction and discharge valves. Now close valves one turn to allow refrigerant pressure to reach test gages.
3. Open liquid line service valve.
4. Check tightness of all electrical connections.
5. For 576C, 566D units only, compressor oil level should be visible in sight glass. Refer to Check Compressor Oil Level. Adjust the oil level as required. Refer to Start-Up, Preliminary Oil Charge section. No oil should be removed unless the crankcase heater has been energized for at least 24 hours.
6. Be sure unit is properly leak checked, dehydrated, and charged. See Preliminary Charge, this page.
7. Electrical power source must agree with nameplate rating.
8. *Crankcase heater must be firmly locked into compressor crankcase. Be sure crankcase is warm (heater must be on for 24 hours before starting compressor).*
9. Be sure compressor floats freely on the mounting springs and that snubber washers can be moved with finger pressure. See Compressor Mounting, page 9, and Fig. 5 for loosening compressor bolts.

II. LEAK TEST AND DEHYDRATION

Leak test the entire refrigerant system using soap bubbles and/or an electronic leak detector. Evacuate and dehydrate entire refrigerant system.

III. TURN ON CRANKCASE HEATER

Turn on crankcase heater for 24 hours before starting the unit to be sure all the refrigerant is out of the oil. To energize the crankcase heater, proceed as follows:

1. Set the space thermostat set point above the space temperature so there is no demand for cooling.
2. Close the field disconnect.
3. Turn the fan circuit breaker on. Leave the compressor circuit breakers off. The crankcase heater is now energized.

IV. PRELIMINARY CHARGE

Before starting the unit, charge liquid refrigerant into the high side of the system through the liquid service valve. The amount of refrigerant added must be at least 80% of the operating charge listed in the Physical Data table (Tables 1A-1C, pages 6-8). Allow high and low side pressures to equalize before starting compressor. If pressures do not equalize readily, charge vapor on low side of system to assure charge in the evaporator. Refer to GTAC II, Module 5, Charging, Recover, Recycling, and Reclamation for liquid charging procedures.

⚠ **CAUTION:** Prior to starting compressor, refrigerant equal to operating charge must be added to avoid possible compressor damage. See Tables 1A-1C.

START-UP

I. 569D, 566E, 569F UNITS

Compressor crankcase heater must be on for 24 hours before start-up. After the heater has been on for 24 hours, the unit can be started. If no time has elapsed since the preliminary charge step has been completed, it is unnecessary to wait the 24-hour period.

A. Preliminary Checks

1. Ensure that compressor service valves are backseated.
2. Verify that each compressor floats freely on its mounting springs.
3. Check that electric power supply agrees with unit nameplate data.
4. Verify that compressor crankcase heater is securely in place.
5. Check that compressor crankcase heater has been on at least 24 hours.
6. Recheck for leaks using same procedure as previously outlined in Pre-Start-Up section, Leak Test and Dehydration.
7. If any leaks are detected, evacuate and dehydrate as previously outlined in Pre-Start-Up section, Leak Test and Dehydration.
8. All internal wiring connections must be tight, and all barriers and covers must be in place.

NOTE: The 569D, 566E, 569F units do not have a compressor oil level sight glass. These units are factory changed with the required amount of oil. If recharging is required, use Zerol 150 for the 569F, 569D072, and 569D090. Use Replacement Components Division Oil (P/N P903-0101) for the 569D120 and 566E150-240.

B. Compressor Rotation

On 3-phase units with scroll compressors, it is important to be certain compressor is rotating in the proper direction. To determine whether or not compressor is rotating in the proper direction:

1. Connect service gages to suction and discharge pressure fittings.
2. Energize the compressor.
3. The suction pressure should drop and the discharge pressure should rise, as is normal on any start-up.

If the suction pressure does not drop and the discharge pressure does not rise to normal levels:

1. Note that the condenser fan is probably also rotating in the wrong direction.
2. Turn off power to the unit, tag disconnect.
3. Reverse any two of the unit power leads.
4. Reapply power to the compressor, verify correct pressures.

The suction and discharge pressure levels should now move to their normal start-up levels.

C. Compressor Overload

This overload interrupts power to the compressor when either the current or internal motor winding temperature becomes excessive, and automatically resets when the internal temperature drops to a safe level. This overload may require up to 60 minutes (or longer) to reset. If the internal overload is suspected of being open, disconnect the electrical power to the unit and check the circuit through the overload with an ohmmeter or continuity tester.

D. Advanced Scroll Temperature Protection (ASTP)

Advanced Scroll Temperature Protection (ASTP) is a form of internal discharge temperature protection that unloads the scroll compressor when the internal temperature reaches approximately 300 F. At this temperature, an internal bi-metal disk valve opens and causes the scroll elements to separate, which stops compression. Suction and discharge pressures balance while the motor continues to run. The longer the compressor runs unloaded, the longer it must cool before the bi-metal disk resets. See Fig. 12.

To manually reset ASTP, the compressor should be stopped and allowed to cool. If the compressor is not stopped, the motor will run until the motor protector trips, which occurs up to 90 minutes later. Advanced Scroll Temperature Protection will reset automatically before the motor protector resets, which may take up to 2 hours. A label located above the terminal box identifies Copeland Scroll compressor models (ZR94, 108 and 125) that contain this technology. See Fig. 13.

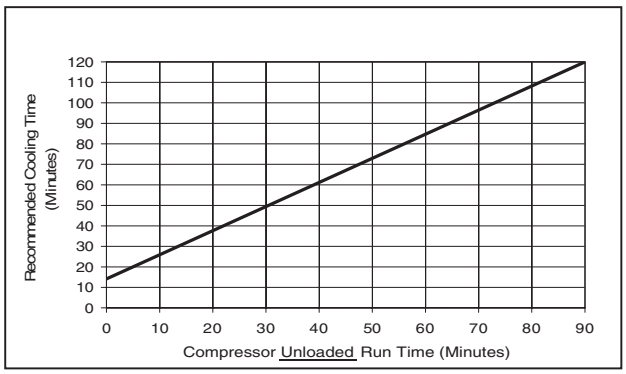

*Times are approximate.

NOTE: Various factors, including high humidity, high ambient temperature, and the presence of a sound blanket will increase cool-down times.

Fig. 12 — Recommended Minimum Cool-Down Time After Compressor is Stopped*

Fig. 13 — Advanced Scroll Temperature Protection Label

E. Compressor Lockout Device

The compressor lockout (CLO) device prevents the compressor from starting or running in a high pressure, loss-of-charge or freeze-stat open situation. Reset the CLO device by setting the thermostat to eliminate cooling demand and return it to the original set point. If the system shuts down again for the same fault, determine the possible cause before attempting to reset the CLO device.

F. Start Unit

The field disconnect is closed, the fan circuit breaker is closed, and the space thermostat is set above ambient so that there is no demand for cooling. Only the crankcase heater will be energized.

Next, reset space thermostat below ambient so that a call for cooling is ensured.

NOTE: Do not use circuit breaker to start and stop the compressor except in an emergency.

⚠ **CAUTION:** Never charge liquid into the low-pressure side of system. Do not overcharge. During charging or removal of refrigerant, be sure indoor-fan system is operating.

G. Adjust Refrigerant Charge

Unit must be charged in Cooling mode only. Refer to Cooling Charging Charts, Fig. 14-18 and to Table 7 for maximum charge level. Do not exceed maximum refrigerant charge. For applications with line lengths greater than 100 ft, contact Bryant representative. Vary refrigerant until the conditions of the chart are met. Note that charging charts are different from type normally used. Charts are based on charging the units to the correct subcooling for the various operating conditions. Accurate pressure gage and temperature sensing device are required. Connect the pressure gage to the service port on the liquid line service valve. Mount the temperature sensing device on the liquid line, close to the liquid line service valve and insulate it so that outdoor ambient temperature does not affect the reading. Indoor airflow must be within the normal operating range of the unit. Operate unit a minimum of 15 minutes. Ensure pressure and temperature readings have stabilized. Plot liquid pressure and temperature on chart and add or reduce charge to meet curve. Adjust charge to conform with charging chart, using the liquid pressure and temperature to read chart.

If the liquid line sight glass is cloudy, check refrigerant charge again. *Ensure all fans are operating.* Also ensure maximum allowable liquid lift has not been exceeded. If charged per chart and if the sight glass is still cloudy, check for a plugged filter drier or a partially closed solenoid valve. Replace or repair, as needed.

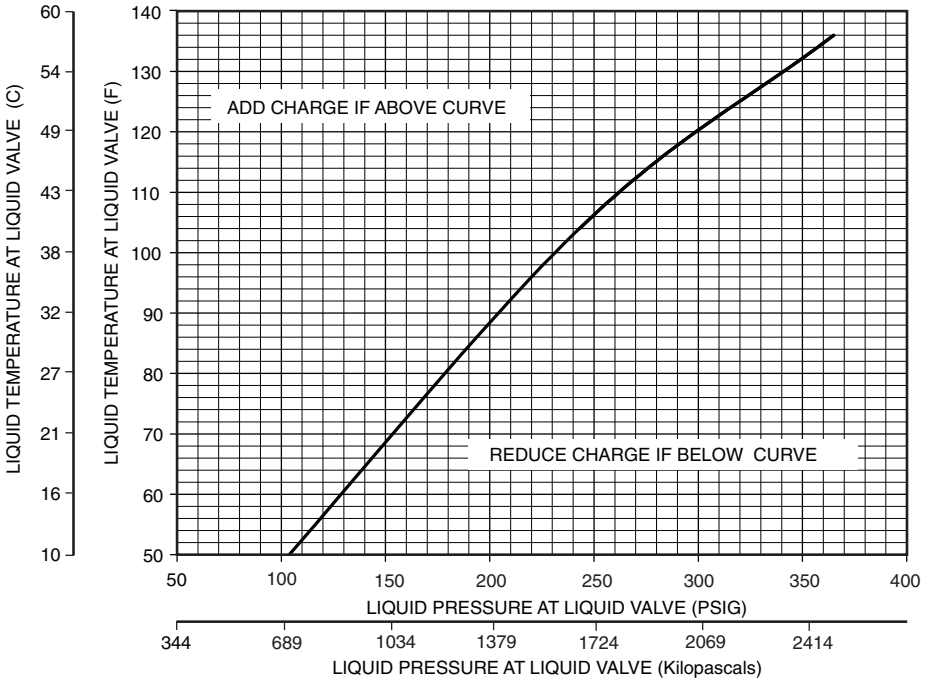

Fig. 14 — 569D072-120, 569F120, 576C090-120 Charging Chart

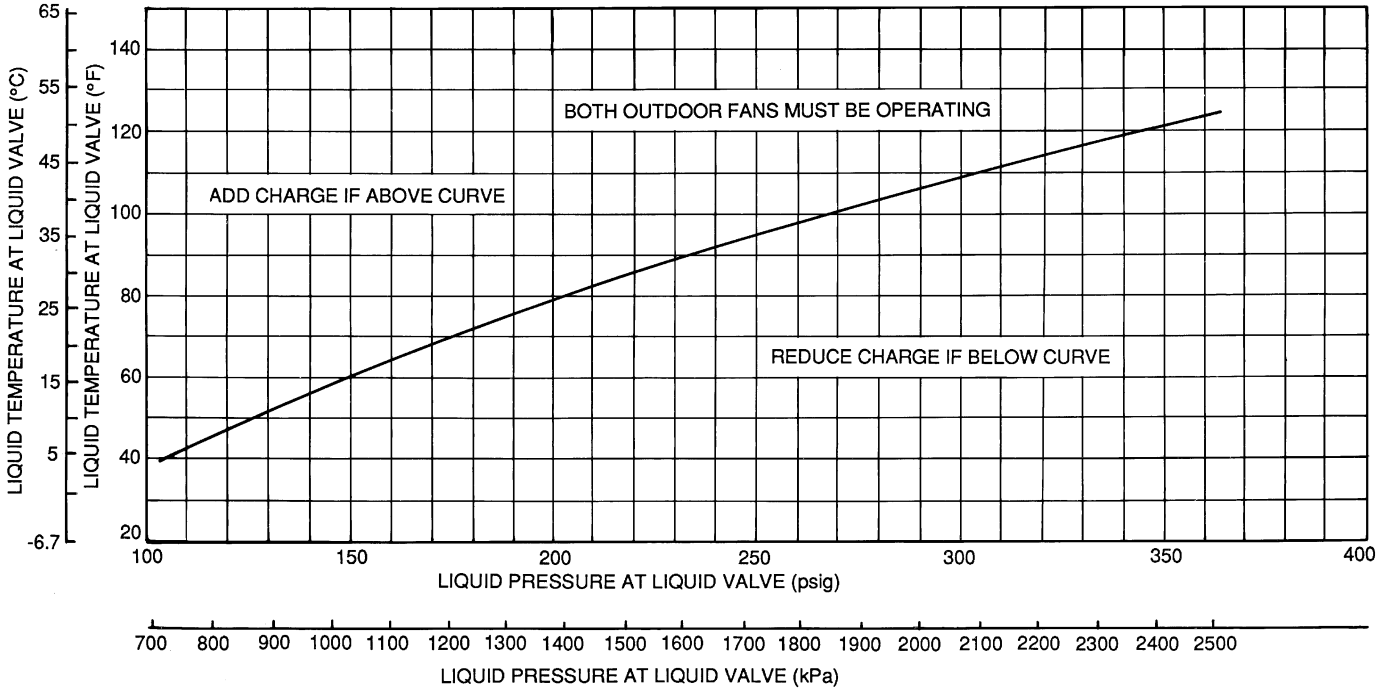

Fig. 15 — 566D150 Charging Chart

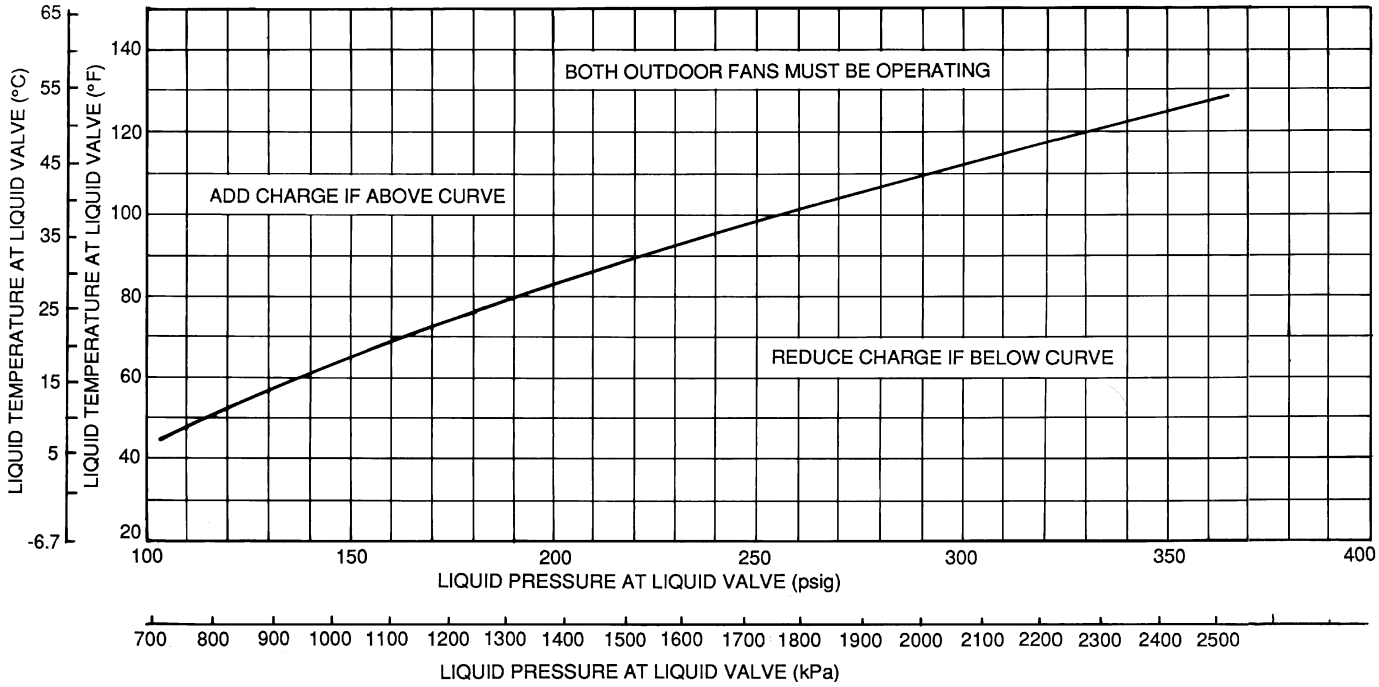

Fig. 16 — 566D180 Charging Chart

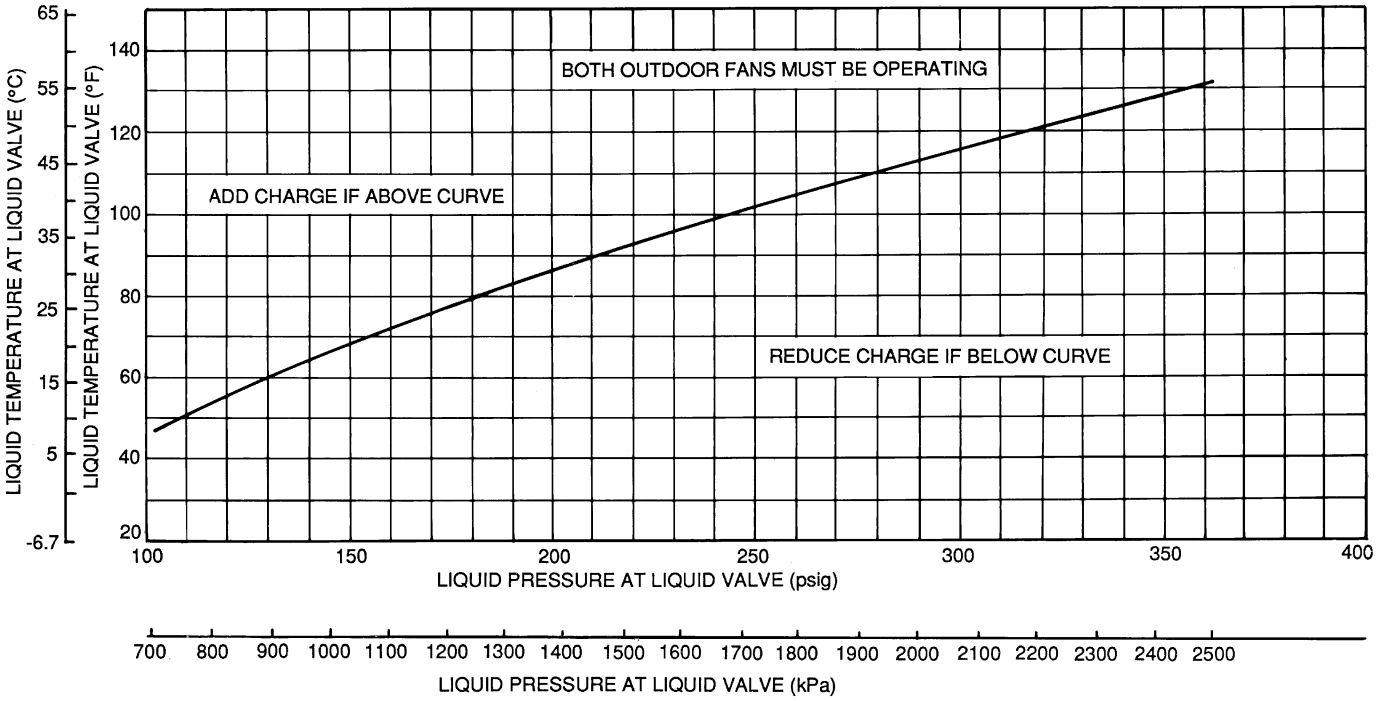

Fig. 17 — 566D240 Charging Chart

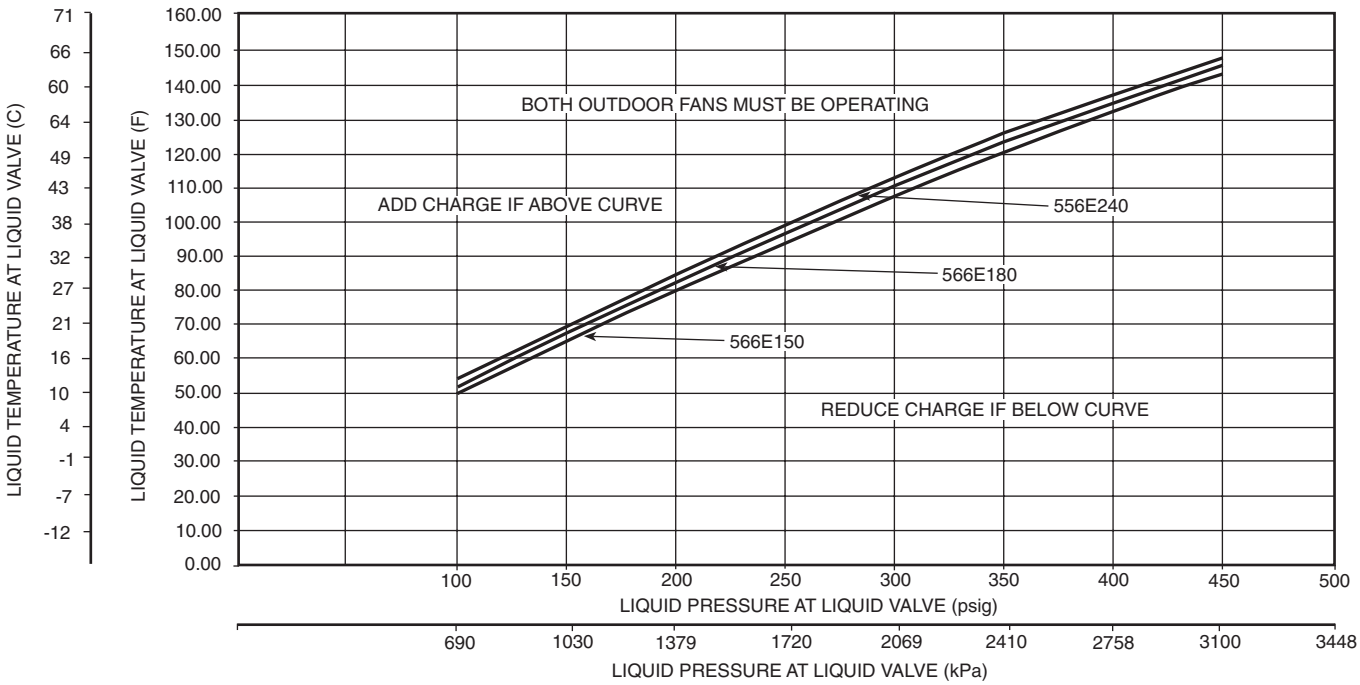

Fig. 18 — 566E150-240 Charging Chart

H. Final Checks

Ensure all safety controls are operating, control panel covers are on, and the service panels are in place.

Table 7 — Maximum Refrigerant Charge

UNIT		R-22 (lb)
569D	072 090 120	17.3 34.2 34.2
576C	090 102 120	34.2
569F	120	(2) 17.1
566D	150 180 240	40.3 39.8 39.8
566E	150 180 240	48.0

NOTE: 569F120 has 2 charges, one per circuit.

II. 576C, 566D UNITS

Compressor crankcase heater must be on for 24 hours before start-up. After the heater has been on for 24 hours, the unit can be started. If no time has elapsed since the preliminary charge step has been completed, it is unnecessary to wait the 24-hour period.

A. Preliminary Checks

1. Ensure that compressor service valves are back-seated.
2. Verify that each compressor floats freely on its mounting springs.
3. Check that electric power supply agrees with unit nameplate data.
4. Verify that compressor crankcase heater is securely in place.
5. Check that compressor crankcase heater has been on at least 24 hours.
6. Note that compressor oil level is visible in the sight glass.
7. Recheck for leaks using same procedure as previously outlined in Pre-Start-Up section, Leak Test and Dehydration.
8. If any leaks are detected, evacuate and dehydrate as previously outlined in Pre-Start-Up section, Leak Test and Dehydration.
9. All internal wiring connections must be tight, and all barriers and covers must be in place.

B. Preliminary Oil Charge

Compressor is factory charged with oil (see Tables 1A-1C). When oil is checked at start-up, it may be necessary to add or remove oil to bring it to the proper level. One recommended oil level adjustment method follows:

Add Oil

Close suction service valve and pump down crankcase to 2 psig. (Low-pressure switch must be jumpered.) Wait a few minutes and repeat until pressure remains steady at 2 psig. Remove oil fill plug above the oil level sight glass, add oil through plug hole, and replace plug. Run compressor for 20 minutes and check oil level. See Fig. 19.

NOTE: Use only Bryant approved compressor oil. Approved sources are:

Petroleum Specialties Inc. . . . . Cryol 150A

Texaco, Inc. . . . . Capella WF-32

Witco Chemical Co. . . . . Suniso 3GS

Do not use oil that has been drained out, or oil that has been exposed to atmosphere.

Remove Oil

Pump down compressor to 2 psig. Loosen the 1/4-in. pipe plug at the compressor base and allow the oil to seep out past the threads of the plug.

NOTE: The crankcase will be slightly pressurized. Do not remove the plug, or the entire oil charge will be lost.

Small amounts of oil can be removed through the oil pump discharge connection while the compressor is running.

C. Start Unit

The field disconnect is closed, the fan circuit breaker is closed, and the space thermostat is set above ambient so that there is no demand for cooling. Only the crankcase heater will be energized.

Next, close the compressor circuit breaker and then reset space thermostat below ambient so that a call for cooling is ensured.

NOTE: Do not use circuit breaker to start and stop the compressor except in an emergency.

After starting, there is a delay of at least 3 seconds before compressor starts.

⚠ **CAUTION:** Never charge liquid into the low-pressure side of system. Do not overcharge. During charging or removal of refrigerant, be sure indoor-fan system is operating.

D. Adjust Refrigerant Charge

Unit must be charged in Cooling mode only. Refer to Cooling Charging Charts, Fig. 14-18 and to Table 7 for maximum charge level. Vary refrigerant until the conditions of the chart are met. Note that charging charts are different from type normally used. Charts are based on charging the units to the correct subcooling for the various operating conditions. Accurate pressure gage and temperature sensing device are required. Connect the pressure gage to the service port on the liquid line service valve. Mount the temperature sensing device on the liquid line, close to the liquid line service valve and insulate it so that outdoor ambient temperature does not affect the reading. Indoor airflow must be within the normal operating range of the unit. Operate unit a minimum of 15 minutes. Ensure pressure and temperature readings have stabilized. Plot liquid pressure and temperature on chart and add or reduce charge to meet curve. Adjust charge to conform with charging chart, using the liquid pressure and temperature to read chart.

If the sight glass is cloudy, check refrigerant charge again. *Ensure all fans are operating.* Also ensure maximum allowable liquid lift has not been exceeded. If charged per chart and if the sight glass is still cloudy, check for a plugged filter drier or a partially closed solenoid valve. Replace or repair, as needed.

E. Check Compressor Oil Level

After adjusting the refrigerant charge, allow the compressor to run fully loaded for 20 minutes. Running oil level should be within view of the crankcase sight glass. Stop the compressor at the field power supply disconnect and check the crankcase oil level. Add oil only if necessary to bring the oil into view in the sight glass. If oil is added, run the compressor for an additional 10 minutes, then stop and check oil level. If the level remains low, check the piping system for proper design for oil return; also, check the system for leaks.

If the initial check shows too much oil (too high in the sight glass) remove oil to proper level. See Preliminary Oil Charge, this page, for proper procedure for adding and removing oil. See Fig. 19.

When the above checks are complete, repeat the procedure with the unit operating at minimum load conditions.

Unload the compressor by turning the control set point adjustment nut counterclockwise until the adjustment nut stops. The unloader is now at 0 psig set point. If electric actuated unloaders are installed, energize the solenoid to unload the compressor.

Return unloader to original setting after checks are complete.

F. Final Checks

Ensure all safety controls are operating, control panel covers are on, and the service panels are in place.

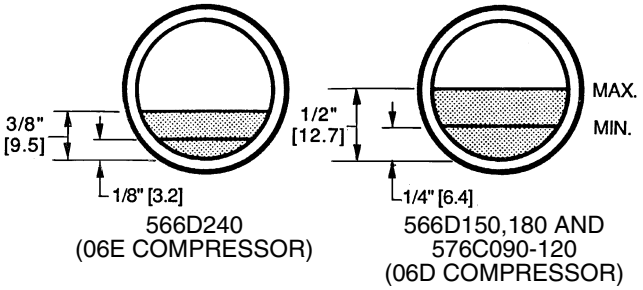

Fig. 19 — Operating Oil Levels

OPERATING SEQUENCE

I. COOLING

A. 569D072-120, 576C090-120 Cooling

At start-up, the thermostat calls for cooling. With all safety devices satisfied, the compressor contactor and fan contactor energize, causing the compressor and outdoor-fan motor to operate. Contacts energize, allowing the field-supplied and field-installed indoor-fan contactor to function. A field-supplied and field-installed liquid line valve also opens, allowing the system to function in Cooling mode. As cooling demand is satisfied, the thermostat contacts break, deenergizing the contactor and causing the system to shut off. The liquid line solenoid valve closes, minimizing the potential for refrigerant migration. The compressor does not restart until the thermostat again calls for cooling. The system is protected with a safety circuit so that the system will not start if a fault exists (i.e., high-pressure or discharge gas temperature [569D090 and 120 only] fault). To reset the safety circuit, set the thermostat to eliminate the cooling demand, then return to original set point. This should be done only once, and if system shuts down due to the same fault, determine the problem before attempting to restart the system.

B. 566D150-240 Cooling

When the first stage of cooling thermostat closes, the timer starts. After approximately 3 seconds, the timer activates the compressor and fan motor no. 1 contactors. When the liquid pressure builds to approximately 257 psig, fan motor no. 2 is energized.

When there is demand for additional cooling capacity, the second stage of the cooling thermostat closes, energizing a field-supplied liquid line solenoid (LLS) valve, which opens. This increases the suction pressure, causing the compressor to operate at higher capacity (compressor loads).

When the fan switch is set at AUTO, the indoor-air fan cycles with the compressor. When the switch is set at CONT, the indoor-air fan runs continuously.

At shutdown, the Time Guard II timer prevents the compressor from restarting for approximately 5 minutes.

In addition, an LLS valve wired in parallel with the compressor contactor coil shuts off the liquid line to prevent

refrigerant migration back to the compressor during the off cycle.

C. 569F120 Cooling

When the thermostat calls for stage one cooling at start-up, and all safety devices are satisfied, the compressor contactor no. 1 (C1) energizes causing compressor no. 1 and outdoor-fan motor no. 1 to start (the indoor-fan contactor should be wired to start at the same time as the compressor). The liquid line solenoid (LLS) valve will open when compressor no. 1 starts, allowing refrigerant to flow in the system.

When the thermostat calls for stage two cooling, compressor contactor no. 2 (C2) energizes causing compressor no. 2 and outdoor-fan motor no. 2 to start. As the cooling demand decreases, stage two on the thermostat opens, causing compressor no. 2 and outdoor-fan motor no. 2 to shut down. As the cooling continues to decrease, stage one of the thermostat opens causing compressor no. 1 and outdoor-fan motor no. 1 to shut down. The LLS valve for each compressor will close when the associated compressor stops, minimizing the potential for refrigerant migration during the off cycle.

The indoor-fan motor will stop if the thermostat is set to AUTO and will continue to operate if the thermostat is set to CONT. Each compressor is protected with a CLO device so that the compressor will not operate if there is a high-pressure fault, low pressure fault, or a compressor is off due to internal line break overcurrent/over temperature protection. To reset the CLO device, set the thermostat higher to remove the cooling demand, then return to the original set point. This should be done only once. If the system shuts down with the same fault, the cause for the fault should be determined and corrected before the a CLO device is reset again.

D. 566E150-240 Cooling

At start-up, when the thermostat calls for first stage cooling and all safety devices are satisfied, the compressor contactor (C1) energizes causing compressor no. 1 and fan motor no. 1 to start. Fan motor no. 2 will start when the fan cycling pressure switch (FCPS) closes as discharge pressure builds. With the indoor-fan contactor wired to TB2-4 and TB2-9 contacts on the terminal block, the indoor-fan will also start with the compressor. The liquid line solenoid (LLS) valve will open when compressor no. 1 starts, allowing refrigerant to flow in the system.

When the thermostat calls for stage two cooling, compressor contactor no. 2 (C2) energizes causing compressor no. 2 to start. As the cooling demand decreases, stage two on the thermostat opens, causing compressor no. 2 to shut down. As the cooling continues to decrease, stage one of the thermostat opens causing compressor no. 1 and outdoor-fan motor to shut down. The LLS valve for each compressor will close when the associated compressor stops, minimizing the potential for refrigerant migration during the off cycle.

The indoor-fan motor will stop if the thermostat is set to AUTO and will continue to operate if the thermostat is set on CONT. Each compressor is controlled by the thermostat so they will not start until there is a demand from the thermostat. Each compressor is protected with a CLO device so that the compressor will not operate if there is a high-pressure fault, low-pressure fault, or compressor is off due to internal line break overcurrent/overtemperature protection. To reset the a CLO device, set the thermostat higher to remove the cooling demand, then return to the original set point. This should be done only once. If the system shuts down with the same fault, the cause for the fault should be determined and corrected before the a CLO device is reset again.

II. HEATING

The heating thermostat (TH) energizes a field-supplied relay which operates heating controls and energizes the indoor unit relay. When the fan switch is set at AUTO, the indoor unit fan cycles with the heating control. The indoor unit fan runs continuously when the fan switch is set at ON.

Causes of complete unit shutdown are: interruption of supplied power, open compressor internal protector (IP), open control circuit breaker, or an open high-pressure or low-pressure safety switch.

SERVICE

I. CAPACITY CONTROL (576C, 566D UNITS)

A suction pressure-actuated unloader controls 2 cylinders and provides capacity control. Unloaders are factory set (see Tables 1A-1C), but can be field adjusted as described in the next paragraphs.

Control set point (cylinder load point) is adjustable from 0 to 85 psig (586 kPa). To adjust, turn control set point adjustment nut (Fig. 20) clockwise to its bottom stop. In this position, set point is 85 psig. Next, turn adjustment counterclockwise to desired control set point. Every full turn counterclockwise decreases set point by 7.5 psig.

Pressure differential (difference between cylinder load and unload points) is adjustable from 6 to 22 psig. To adjust, turn pressure differential adjustment screw (Fig. 20) counterclockwise to its back stop position. In this position, differential is 6 psig. Next, turn adjustment clockwise to desired pressure differential setting. Every full turn clockwise increases differential by 1.5 psig.

II. HEAD PRESSURE CONTROL (566D, 566E150-240 UNITS ONLY)

Fan cycling is a standard feature. The no. 2 fan cycles in response to changes in liquid pressure. The switch cycles the fan off at 160 ± 10 psig as pressure decreases, and cycles it back on at 255 ± 10 psig.

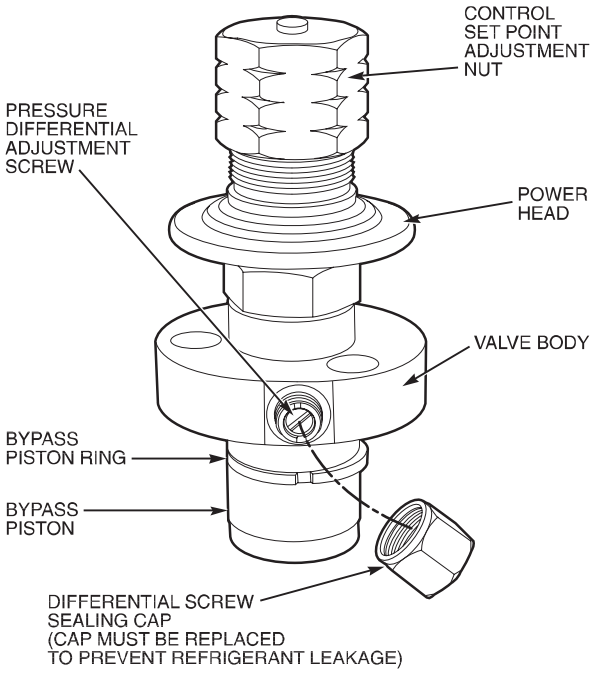

Fig. 20 — Compressor Capacity Control Unloader

III. TIME GUARD II CIRCUIT (566D ONLY)

Circuit prevents short-cycling by providing a delay of approximately 5 minutes before restarting compressor after shutdown from safety device action.

On start-up, the Time Guard II timer causes a delay of approximately 3 seconds after thermostat closes.

On compressor shutdown, the timer recycles for approximately 5 minutes. During this time, the compressor cannot restart.

Refer to Fig. 21 and to label diagram on unit.

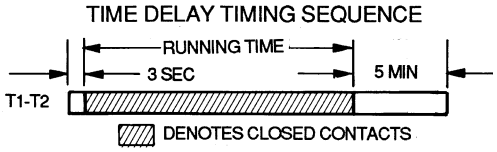

Fig. 21 — Timer Sequence Chart

IV. CRANKCASE HEATER

The heater prevents refrigerant migration and compressor oil dilution during shutdown whenever compressor is not operating. It is wired to cycle with the compressor; the heater is off when compressor is running, and on when compressor is off.

Both compressor service valves must be closed whenever the crankcase heater is deenergized for more than 6 hours. The crankcase heater is operable as long as the control circuit is energized.

V. COMPRESSOR PROTECTION

A. Circuit Breaker (566D Only)

Calibrated trip manual reset, ambient compensated, magnetic breaker protects against motor overload and locked rotor conditions.

B. Compressor Overtemperature Protection (IP)

A thermostat installed on compressor motor winding reacts to excessively high winding temperatures and shuts off the compressor.

C. Time Guard II Control (566D Only)

Control prevents compressor from short cycling. See Operating Sequence.

D. Crankcase Heater

Heater minimizes absorption of liquid refrigerant by oil in crankcase during brief or extended shutdown periods. The control circuit is maintained if compressor fan motor circuit breakers are turned off. The main disconnect must be on to energize crankcase heater.

IMPORTANT: Never open any switch or disconnect that energizes the crankcase heater unless unit is being serviced or is to be shut down for a prolonged period. After a prolonged shutdown on a service job, energize the crankcase heater for 24 hours before starting the compressor.

E. Advanced Scroll Temperature Protection (ASTP)

See Advanced Scroll Temperature Protection (ASTP) on page 16.

VI. LOW-PRESSURE SWITCHES

The 569D, 569F, 566E, 576C low-pressure switches are mounted on the suction line. The 566D low-pressure switches are mounted on the compressor. Switches are all fixed, non-adjustable type.

VII. HIGH-PRESSURE SWITCHES

The 569D, 576C and 569F high-pressure switches are mounted on the liquid line. The 566E150-240 high-pressure switches are mounted on the discharge line. The 566D high-pressure switches are mounted on the compressor. The switches are all fixed, non-adjustable type.

A. To Check

Slowly close liquid shutoff valve and allow compressor to pump down. Do not allow compressor pumpdown below 2 psig. Compressor should shut down when suction pressure drops to cutout pressure in Tables 1A-1C, and should restart when pressure builds up to cut-in pressure shown.

VIII. DISCHARGE GAS THERMOSTAT (569D090 ONLY)

A sensor on the discharge line will stop the compressor if an abnormally high discharge temperature is detected. If the unit shuts down on a high discharge temperature fault, restart the unit by cycling the thermostat or the power disconnect switch.

IX. OUTDOOR FANS

Each fan is supported by a formed-wire mount bolted to the fan deck and covered with a wire guard. Fan motors have permanently lubricated bearings.

NOTE: On 566D units, the exposed end of the motor shaft is covered with a rubber boot. In case a fan motor must be repaired or replaced, be sure the rubber boot is put back on when the fan is reinstalled and be sure the fan guard is in place before starting the unit. Figure 22 shows the proper position of the mounted fan.

X. LUBRICATION

Fan motors have sealed bearings. No provisions are made for lubrication.

Compressor has its own oil supply. Loss of oil due to a leak in the system should be the only reason for adding oil after the system has been in operation.

XI. COIL CLEANING AND MAINTENANCE

This section discusses the cleaning and the maintenance of standard coils and E-Coated coils. Routine cleaning of coil surfaces is essential to minimize contamination build-up and remove harmful residue. Inspect coils monthly and clean as required.

A. Cleaning Standard Coils

Standard coils can be cleaned with a vacuum cleaner, washed out with low velocity water, blown out with low-pressure compressed air, or brushed (*do not use wire brush*). Fan motors are drip-proof but not waterproof. Do NOT use acid cleaners.

Clean outdoor coil annually or as required by location or outdoor air conditions. Inspect coil monthly, and clean as required. Fins are not continuous through coil sections; dirt and debris may pass through first section, become trapped between second and third rows of fins and restrict outdoor airflow. Use a flashlight to determine if dirt or debris has collected between coil sections. Clean coil as follows:

1. Turn off unit power.
2. Remove screws holding rear corner posts and top cover in place. Pivot top cover up 12 to 18 in. and support with a rigid support. See Fig. 23.
3. Remove clips securing tube sheets together at the return bend end of the coil. Carefully spread the ends of the coil rows apart by moving the outer sections. See Fig. 24.

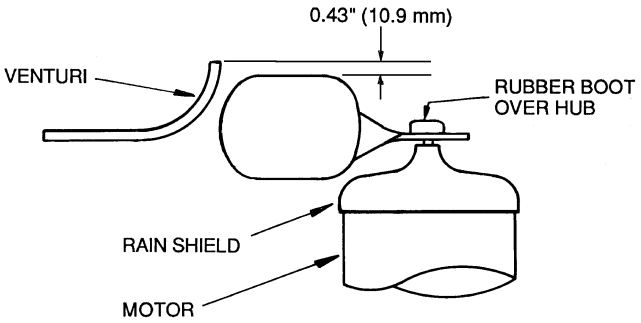

Fig. 22 — Outdoor Fan — 566D Units

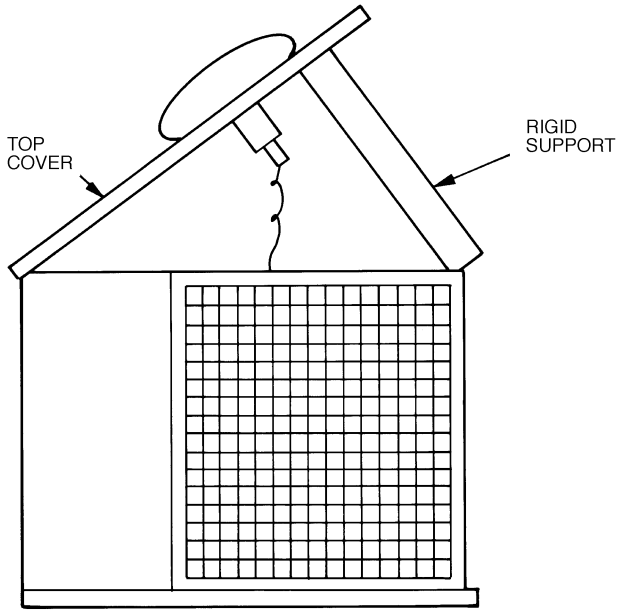

Fig. 23 — Pivot and Support Top Cover

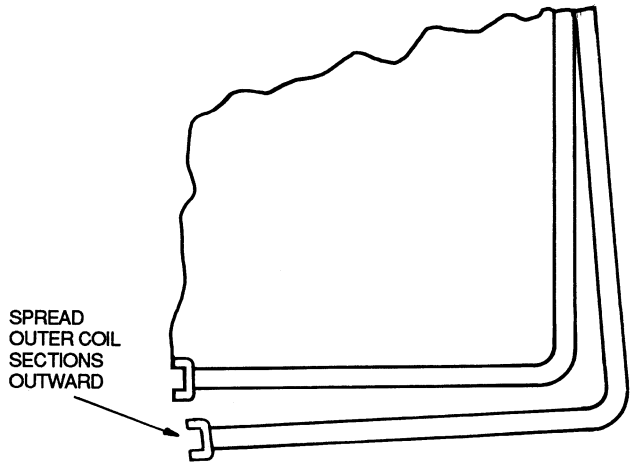

Fig. 24 — Coil Cleaning (Typical)

4. Using a water hose, or other suitable equipment, flush down between the sections of coil to remove dirt and debris.
5. Clean the remaining surfaces in the normal manner.
6. Reposition outer coil sections.
7. Reinstall clips which secure tube sheets.
8. Replace top cover and rear corner posts.

B. Cleaning and Maintaining E-Coated Coils

Routine cleaning of condenser coil surfaces is essential to maintain proper operation of the unit. Elimination of contamination and removal of harmful residue will greatly increase the life of the coil and extend the life of the unit. The following maintenance and cleaning procedures are recommended as part of the routine maintenance activities to extend the life of the coil.

Remove Surface Loaded Fibers

Debris such as dirt and fibers on the surface of the coil should be removed with a vacuum cleaner. If a vacuum cleaner is not available, a soft brush may be used. The cleaning tool should be applied in the direction of the fins. Coil surfaces can be easily damaged (fin edges bent over) if the tool is applied across the fins.

NOTE: Use of a water stream, such as a garden hose, against a surface loaded coil will drive the fibers and dirt into the coil. This will make cleaning efforts more difficult. Surface debris must be completely removed prior to using a low velocity clean water rinse.

Periodic Clean Water Rinse

A periodic clean water rinse is very beneficial for coils that are applied in coastal or industrial environments. However, it is very important that the water rinse is made with very low velocity water stream to avoid damaging the fin edges. Monthly cleaning is recommended.

Routine Cleaning of E-Coated Coil Surfaces

Monthly cleaning with Environmentally Sound Coil Cleaner is essential to extend the life of coils. It is recommended that all coils including standard aluminum, pre-coated, copper/copper, or E-coated coils be cleaned with the Environmentally Sound Coil Cleaner as described below. Coil cleaning should be part of the regularly scheduled maintenance procedures of the unit to ensure long life of the coil. Failure to clean the coils may result in reduced durability in the environment.

Environmentally Sound Coil Cleaner is non-bacterial, biodegradable and will not harm the coil or surrounding components such as electrical wiring, painted metal surfaces or insulation. Use of non-recommended coil cleaners is strongly discouraged since coil and unit durability could be affected.

The following field-supplied equipment is required for coil cleaning:

- $2^1/_2$ gallon garden sprayer
- water rinse with low velocity spray nozzle

Environmentally Sound Coil Cleaner Application Instructions

Perform the following procedure to clean the coil.

NOTE: Wear proper eye protection such as safety glasses during mixing and application.

1. Remove all surface debris and dirt from the coil with a vacuum cleaner.
2. Thoroughly wet finned surfaced with clean water and a low velocity garden hose, being careful not to bend fins.

3. Mix Environmentally Sound Coil Cleaner in a $2^1/_2$ gallon garden sprayer according to the instructions included with the Cleaner. The optimum solution temperature is 100 F.

⚠ **CAUTION:** DO NOT USE water in excess of 130 F. Enzymes in coil cleaner will be destroyed and coil cleaner will not be effective.

4. Thoroughly apply Environmentally Sound Coil Cleaner solution to all coil surfaces including finned area, tube sheets, and coil headers. Hold garden sprayer nozzle close to finned areas and apply cleaner with a vertical, up-and-down motion. Avoid spraying in horizontal pattern to minimize potential for fin damage. Ensure cleaner thoroughly penetrates deep into finned areas. Interior and exterior finned areas must be thoroughly cleaned.
5. Allow finned surfaces to remain wet with cleaning solution for 10 minutes. Ensure surfaces are not allowed to dry before rinsing. Reapply cleaner as needed to ensure 10-minute saturation is achieved.
6. Thoroughly rinse all surfaces with low velocity clean water using downward rinsing motion of water spray nozzle. Protect fins from damage from the spray nozzle.

⚠ **CAUTION:** Do not use bleach, harsh chemicals, or acid cleaners on outdoor or indoor coils of any kind. These types of cleaners are difficult to rinse, and they promote rapid corrosion of the fin collar-copper tube connection. Only use the Environmentally Sound Coil Cleaner.

Never use high pressure air or liquids to clean coils. High pressures damage coils and increase the airside pressure drop. To promote unit integrity, follow cleaning and maintenance procedures in this document.

TROUBLESHOOTING

PROBLEM	SOLUTION
COMPRESSOR DOES NOT RUN	
Contactor Open	
1. Power off.	1. Restore power.
2. Fuses blown in field power circuit.	2. After finding cause and correcting, replace with correct size fuse.
3. No control power.	3. Check control circuit breaker; reset if tripped or replace if defective.
4. Thermostat circuit open.	4. Check thermostat setting.
5. Time Guard II device not operating (566D only).	5. Check Time Guard II device.
6. Compressor circuit breaker tripped (566D only).	6. Check for excessive compressor current draw. Reset breaker; replace if defective.
7. Safety device lockout circuit active.	7. Reset lockout circuit at thermostat or circuit breaker.
8. Low-pressure switch open.	8. Check for refrigerant undercharge, obstruction of indoor airflow, or whether compressor suction shutoff valve is fully open. Make sure liquid line solenoid valve(s) is open.
9. High-pressure switch open.	9. Check for refrigerant overcharge, obstruction of outdoor airflow, air in system, or whether compressor discharge valve is fully open. Be sure outdoor fans are operating correctly.
10. Compressor overtemperature switch open.	10. Check for open condition. Allow for reset. Replace if defective.
11. Loose electrical connections.	11. Tighten all connections.
12. Compressor stuck.	12. See compressor service literature.
Contactor Closed	
1. Compressor leads loose.	1. Check connections.
2. Motor windings open.	2. See compressor service literature.
3. Single phasing.	3. Check for blown fuse. Check for loose connection at compressor terminal.
COMPRESSOR STOPS ON HIGH-PRESSURE SWITCH	
Outdoor Fan On	
1. High-pressure switch faulty.	1. Replace switch.
2. Reversed fan rotation.	2. Confirm rotation, correct if necessary.
3. Airflow restricted.	3. Remove obstruction.
4. Air recirculating.	4. Clear airflow area.
5. Noncondensables in system.	5. Recover refrigerant and recharge as required.
6. Refrigerant overcharge.	6. Recover refrigerant as required.
7. Line voltage incorrect.	7. Consult power company.
8. Refrigerant system restrictions.	8. Check or replace filter drier, expansion valve, etc. Check that compressor discharge service valve is fully open.
Outdoor Fan Off	
1. Fan slips on shaft.	1. Tighten fan hub setscrews.
2. Motor not running.	2. Check power and capacitor.
3. Motor bearings stuck.	3. Replace bearings.
4. Motor overload open.	4. Check overload rating. Check for fan blade obstruction.
5. Motor burned out.	5. Replace motor.
COMPRESSOR CYCLES ON LOW-PRESSURE SWITCH	
Indoor-Air Fan Running	
1. Compressor suction service valve partially closed.	1. Open valve fully.
2. Liquid line solenoid valve(s) fails to open.	2. Check liquid line solenoid valve(s) for proper operation. Replace if necessary.
3. Filter drier plugged.	3. Replace filter drier.
4. Expansion valve power head defective.	4. Replace power head.
5. Low refrigerant charge.	5. Add charge. Check low-pressure switch setting.

TROUBLESHOOTING (cont)

PROBLEM	SOLUTION
COMPRESSOR CYCLES ON LOW-PRESSURE SWITCH (cont)	
Airflow Restricted	
1. Coil iced up.	1. Check refrigerant charge.
2. Coil dirty.	2. Clean coil fins.
3. Air filters dirty.	3. Clean or replace filters.
4. Dampers closed.	4. Check damper operation and position.
Indoor-Air Fan Stopped	
1. Electrical connections loose.	1. Tighten all connections.
2. Fan relay defective.	2. Replace relay.
3. Motor overload open.	3. Power supply.
4. Motor defective.	4. Replace motor.
5. Fan belt broken or slipping.	5. Replace or tighten belt.
COMPRESSOR RUNNING BUT COOLING INSUFFICIENT	
Suction Pressure Low	
1. Refrigerant charge low.	1. Add refrigerant.
2. Head pressure low.	2. Check refrigerant charge. Check outdoor-air fan thermostat settings.
3. Air filters dirty.	3. Clean or replace filters.
4. Expansion valve power head defective.	4. Replace power head.
5. Indoor coil partially iced.	5. Check low-pressure setting.
6. Indoor airflow restricted.	6. Remove obstruction.
Suction Pressure High	
1. Unloaders not functioning.	1. Check unloader adjustments. Check unloader setting.
2. Compressor valve defective.	2. See compressor service literature.
3. Heat load excessive.	3. Check for open doors or windows in vicinity of fan coil.
UNIT OPERATES TOO LONG OR CONTINUOUSLY	
1. Low refrigerant charge.	1. Add refrigerant.
2. Control contacts fused.	2. Replace control.
3. Air in system.	3. Purge and evacuate system.
4. Partially plugged expansion valve or filter drier.	4. Clean or replace.
SYSTEM IS NOISY	
1. Piping vibration.	1. Support piping as required.
2. Compressor noisy.	2. Check valve plates for valve noise. Replace compressor if bearings are worn.
COMPRESSOR LOSES OIL	
1. Leak in system.	1. Repair leak.
2. Crankcase heaters not energized during shutdown.	2. Check wiring and relays. Check heater and replace if defective.
3. Improper interconnecting piping design.	3. Check piping for oil return. Replace if necessary.
FROSTED SUCTION LINE	
Expansion valve admitting excess refrigerant.	Adjust expansion valve.
HOT LIQUID LINE	
1. Shortage of refrigerant due to leak.	1. Repair leak and recharge.
2. Expansion valve opens too wide.	2. Adjust expansion valve.
FROSTED LIQUID LINE	
1. Restricted filter drier.	1. Remove restriction or replace.
2. Liquid line solenoid valve partially closed.	2. Replace valve.
COMPRESSOR WILL NOT UNLOAD	
1. Defective unloader.	1. Replace unloader.
2. Defective capacity control solenoid valve (if used).	2. Replace valve.
3. Miswired capacity control liquid line solenoid (if used).	3. Rewire correctly.
4. Weak, broken, or wrong valve body spring.	4. Replace spring.
COMPRESSOR WILL NOT LOAD	
1. Miswired capacity control liquid line solenoid (if used).	1. Rewire correctly.
2. Defective capacity control solenoid valve (if used).	2. Replace valve.
3. Plugged strainer (high side).	3. Clean or replace strainer.
4. Stuck or damaged unloader piston or piston ring(s).	4. Clean or replace the necessary parts.

Copyright 2004 Bryant Heating & Cooling Systems

START-UP CHECKLIST

I. PRELIMINARY INFORMATION

OUTDOOR: MODEL NO. _____ SERIAL NO. _____

INDOOR: AIR HANDLER MANUFACTURER _____

MODEL NO. _____ SERIAL NO. _____

ADDITIONAL ACCESSORIES _____

II. PRE-START-UP

OUTDOOR UNIT

IS THERE ANY SHIPPING DAMAGE? _____ (Y/N) _____

IF SO, WHERE: _____

_____

WILL THIS DAMAGE PREVENT UNIT START-UP? (Y/N) _____

CHECK POWER SUPPLY. DOES IT AGREE WITH UNIT? (Y/N) _____

HAS THE GROUND WIRE BEEN CONNECTED? (Y/N) _____

HAS THE CIRCUIT PROTECTION BEEN SIZED AND INSTALLED PROPERLY? (Y/N) _____

ARE THE POWER WIRES TO THE UNIT SIZED AND INSTALLED PROPERLY? (Y/N) _____

HAVE COMPRESSOR HOLDDOWN BOLTS BEEN LOOSENED (Snubber washers are snug, but not tight)? (Y/N) _____

CONTROLS

ARE THERMOSTAT AND INDOOR FAN CONTROL WIRING CONNECTIONS MADE AND CHECKED? (Y/N) _____

ARE ALL WIRING TERMINALS (including main power supply) TIGHT? (Y/N) _____

HAS CRANKCASE HEATER BEEN ENERGIZED FOR 24 HOURS? (Y/N) _____

INDOOR UNIT

HAS WATER BEEN PLACED IN DRAIN PAN TO CONFIRM PROPER DRAINAGE? (Y/N) _____

ARE PROPER AIR FILTERS IN PLACE? (Y/N) _____

HAVE FAN AND MOTOR PULLEYS BEEN CHECKED FOR PROPER ALIGNMENT? (Y/N) _____

DO THE FAN BELTS HAVE PROPER TENSION? (Y/N) _____

HAS CORRECT FAN ROTATION BEEN CONFIRMED? (Y/N) _____

PIPING

ARE LIQUID LINE SOLENOID VALVES LOCATED AT THE INDOOR COILS AS REQUIRED? (Y/N) _____

HAVE LEAK CHECKS BEEN MADE AT COMPRESSOR, OUTDOOR AND INDOOR COILS, TXVs (Thermostatic Expansion Valves), SOLENOID VALVES, FILTER DRIERS, AND FUSIBLE PLUGS WITH A LEAK DETECTOR? (Y/N) _____

LOCATE, REPAIR, AND REPORT ANY LEAKS. _____

HAVE ALL COMPRESSOR SERVICE VALVES BEEN FULLY OPENED (BACKSEATED)? (Y/N) _____

HAVE LIQUID LINE SERVICE VALVES BEEN OPENED? (Y/N) _____

IS THE OIL LEVEL IN EACH COMPRESSOR CRANKCASE VISIBLE IN THE COMPRESSOR SIGHT GLASSES (576C/566D Units Only)? (Y/N) _____

CHECK VOLTAGE IMBALANCE

LINE-TO-LINE VOLTS: AB _____ V AC _____ V BC _____ V

(AB + AC + BC)/3 = AVERAGE VOLTAGE = _____ V

MAXIMUM DEVIATION FROM AVERAGE VOLTAGE = _____ V

VOLTAGE IMBALANCE = 100 X (MAX DEVIATION)/(AVERAGE VOLTAGE) = _____

IF OVER 2% VOLTAGE IMBALANCE, DO NOT ATTEMPT TO START SYSTEM!
CALL LOCAL POWER COMPANY FOR ASSISTANCE.

III. START-UP

CHECK INDOOR UNIT FAN SPEED AND RECORD. _____

CHECK OUTDOOR UNIT FAN SPEED AND RECORD. _____

AFTER AT LEAST 10 MINUTES RUNNING TIME, RECORD THE FOLLOWING MEASUREMENTS:

OIL PRESSURE_____
SUCTION PRESSURE_____
SUCTION LINE TEMP_____
DISCHARGE PRESSURE_____
DISCHARGE LINE TEMP_____
ENTERING OUTDOOR UNIT AIR TEMP_____
LEAVING OUTDOOR UNIT AIR TEMP_____
INDOOR UNIT ENTERING-AIR DB (dry bulb) TEMP_____
INDOOR UNIT ENTERING-AIR WB (wet bulb) TEMP_____
INDOOR UNIT LEAVING-AIR DB TEMP_____
INDOOR UNIT LEAVING-AIR WB TEMP_____

COMPRESSOR AMPS (L1/L2/L3) ____/____/____

CHECK COMPRESSOR ROTATION (Scroll compressors only); IS COMPRESSOR ROTATING IN PROPER DIRECTION? (Y/N) _____

CHECK THE COMPRESSOR OIL LEVEL SIGHT GLASSES; ARE THE SIGHT GLASSES SHOWING OIL LEVEL IN VIEW (576C/566D Units Only)? (Y/N) _____

NOTES:

CUT ALONG DOTTED LINE

CUT ALONG DOTTED LINE